Engineering Release Notice (ERN)	Location	Change Description	A = Added W = Was D = Deleted	Document Release Status	
D-18718-73		See DCN	RELEASED	Date	Modification Count

WIRING DIAGRAM INDEX

NAME	DESCRIPTION	PAGE
AA	POWER DISTRIBUTION FRC 1/2	2
AB	POWER DISTRIBUTION FRC 2/2	3
AC	POWER DISTRIBUTION EFRC 1/2	4
AD	POWER DISTRIBUTION EFRC 2/2	5
AE	GROUNDING	6
AF	STARTING AND CHARGING	7
AG	VEHICLE ECU 1/3 EMS POWER CONTROL	8
AH	VEHICLE ECU 2/3	9
AI	VEHICLE ECU 3/3	10
AJ	VECU, PTO AND PDLO SWITCHES	11
AM	STARTING AND CHARGING, ISX-G WITH IN FRA	12
AQ	POWER DISTRIBUTION / KEY SWITCH	13
BA	INSTRUMENT CLUSTER 1/2	14
BB	INSTRUMENT CLUSTER 2/2	15
BE	PEOPLENET	16
BF	QUALCOMM	17
BG	TELEMATICS GATEWAY (TGW)	18
BH	ALLISON BODY BUILDER INTERFACE	19
BI	BODY BUILDER CAB INTERFACE	20
BK	BODYBUILDER BODYLINK	21
BL	BATTERY BUSSING	22
BN	BODYBUILDER TURNPIKE	23
BP	ISX-G FUEL SYSTEM	24
BY	TMC RP 1226 CONNECTORS	25
CA	ENGINE HEATER	26
CB	ENGINE CONTROL MACK ENGINE	27
CL	ENGINE CONTROL ISX-G	28
CM	METHANE DETECTION	29
CN	UREA DOSING SYSTEM - MACK ENGINE OBD 201	30
DA	TRANSMISSION MDRIVE	31
DB	TRANSMISSION CONTROL - ULTRASHIFT	32
DE	TRANSMISSION CONTROL ALLISON 1/2	33
DF	ALLISON TRANSMISSION CONTROLS 2/2	34
DP	MDRIVE DUAL PTO	35
EA	ABS CONTROL WABCO	36
EB	SUSPENSION ECU 6X2	37
EC	ABS CONTROL BENDIX	38
ED	ABS CONTROL BENDIX ECS	39
FA	AIR DRYER/HEATED DRAIN VALVE	40
FD	CHASSIS SOLENOIDS 1/2	41
FE	CHASSIS SOLENOIDS 2/2	42
FG	TIRE PRESSURE MONITOR	43
FH	MACK COMMAND STEERING	44
GA	LIGHTING CONTROL 1/2	45
GB	LIGHTING CONTROL 2/2	46
GC	CLEARANCE LAMPS	47
GD	DRIVING/SIGNAL LIGHTS: AERO OR CONSTRUC	48
GE	LIGHTING FORWARD SIGNAL: CLASSIC	49
GF	TAIL LAMPS W/ ALARM	50
GG	LIGHT CONTROL - BACK UP LAMPS	51
GH	SIDE REPEATER/MARKER OPTIONS	52
GI	SNOW PLOW PREP	53

NAME	DESCRIPTION	PAGE
GJ	BEACON LAMPS	54
GK	HOOK UP LAMPS	55
GL	FOG LIGHTS	56
GM	DRIVING/SIGNAL LIGHTS:CONSTRUC	57
GP	WINSHIELD WIPER/WASHER	58
GQ	HORN	59
HA	CLIMATE CONTROL	60
HB	SLEEPER CLIMATE CONTROL W/LECM 70" SLEE	61
HC	SHORE POWER W/O INVERTER	62
HD	SLEEPER FUNCTIONS W/O LECM 48 INCH BASI	63
HE	LIGHTING AND POWER OUTLETS 70" SLEEPER	64
HF	SLEEPER COURTESY AND UNDER BUNK	65
HH	SLEEPER PIPE LIGHTING SWITCH	66
HI	SHORE POWER W/INVERTER	67
HJ	AUXILLIARY 12V PARK COOLING SYSTEM	68
HK	APADS	69
HL	SLEEPER CLIMATE CONTROL W/LECM 48" SLEEP	70
HM	LIGHTING AND POWER OUTLETS 48" SLEEPER	71
IA	COURTESY LIGHTS - DRIVING COMPARMENT	72
IB	COURTESY LIGHTS - DAYCAB AND HOS SLEEPER	73
IC	COURTESY LIGHTS - 48" SLEEPER	74
ID	COURTESY LIGHTS - 70" SLEEPER	75
IF	POWER WINDOWS/MIRRORS/LOCKS	76
IG	REMOTE DOOR LOCKING	77
IH	BRIGHTWORK	78
IJ	HEATED SEATS/SEATBELT REMINDER/HEATED WI	79
IK	CIGAR LIGHTER / AUX POWER	80
JA	SEAT SRS	81
JE	ADAPTIVE CRUISE CONTROL	82
JF	LANE CHANGE SUPPORT SYSTEM	83
JG	LANE DEPARTURE WARNING -DAYCAB AND 48" S	84
JH	LANE DEPARTURE WARNING - 70 " SLEEPER	85
KA	AUDIO SYSTEM - DAYCAB	86
KB	AUDIO SYSTEM - SLEEPERS	87
KC	AUDIO SYSTEM SPEAKER OUTPUTS W/ AMPLIFIE	88
KD	AUDIO SYSTEM - BLUETOOTH	89
KL	INFOTAINMENT AUDIO SYSTEM 1/2	90
KM	INFOTAINMENT AUDIO SYSTEM 2/2	91
MA	TRAILER CABLE	92
MB	TRAILER CABLE OPTIONS	93
MC	TRAILER CABLES OPTIONS	94
MD	CENTER PIN HOT	95
NA	SPARE SWITCHES AND AUXSW-6 OPTION	96
NB	SPARE SWITCHES - AUXS-8BB	97
NC	SPARE SWITCHES - BBM-PK16	98
ND	TAILGATE LIFT POWER	99
XA	DIAGNOSTICS 1/4 (DL4 - J1587 & DL2 - J22	100
XB	DIAGNOSTICS 2/4 (CAB DL1 - J1939)	101
XC	DIAGNOSTICS 3/4 (CHASSIS DL1 - J1939)	102
XD	DIAGNOSTICS 4/4 (CHASSIS DL1 - 1939)	103
XF	DIAGNOSTICS CUMMINS (DL10)	104

The copying, distribution and utilization of this document as well as the communication of its contents to others without expressed authorization is prohibited. Offenders will be held liable for payment of damages. All rights reserved in the event of the grant of a patent, utility model or ornamental design registration.

Document title

WIRING DIAGRAM, 12V MACK CONVENTIONAL

VOLVO

Group Trucks Technology

The legal owner of this document is as stated under "Design Location" in KOLA and in the associated "Part Version Report"

Document type

PRODUCT SCHEMATICS

Document No	Issue	Volume	Sheet No
23970505	02	1 (1)	1 (104)

POWER DISTRIBUTION FRC 1/2

WIRING DIAGRAM: AA

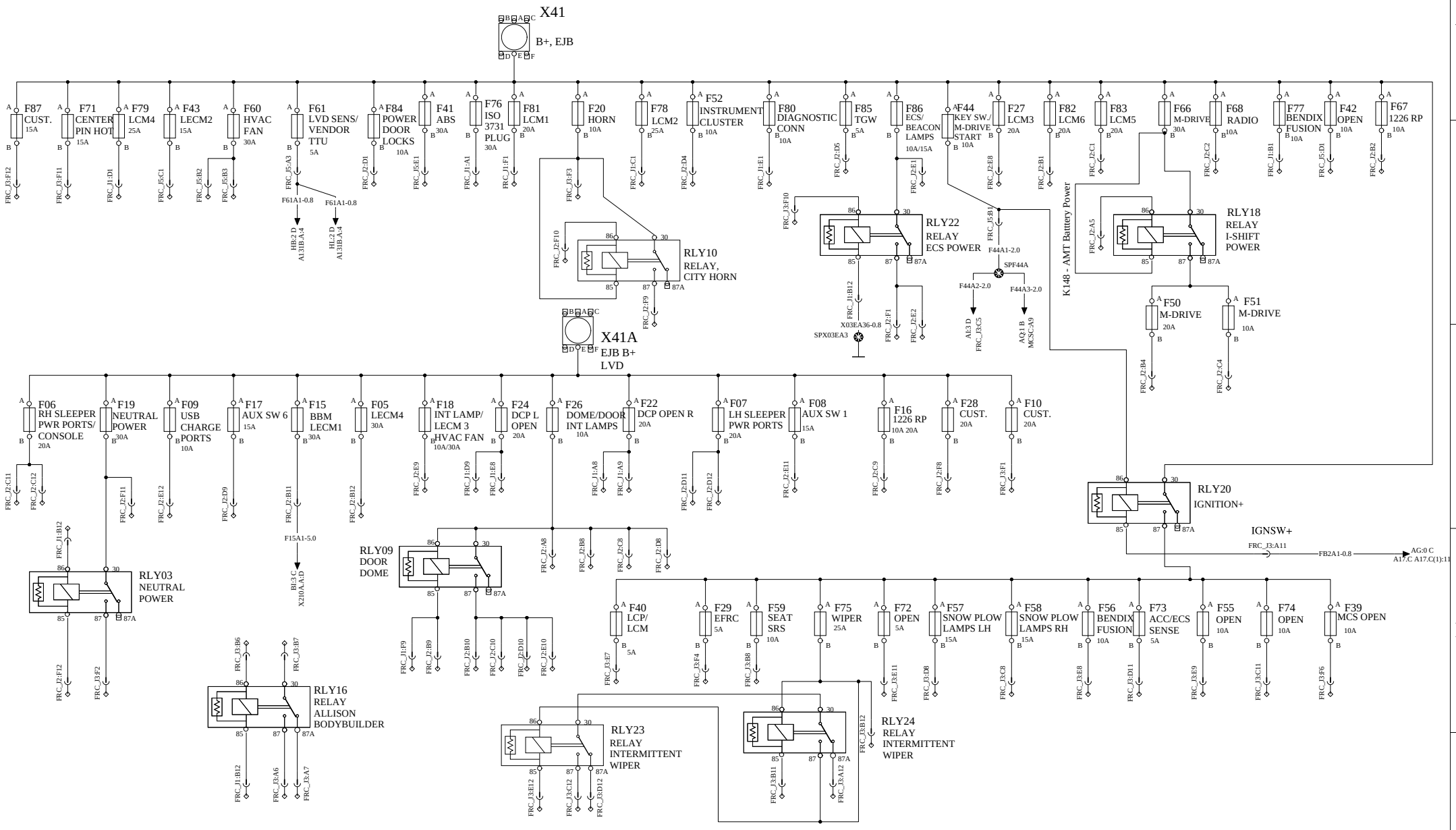

Volvo Truck Corporation	Document title WIRING DIAGRAM, 12V MACK CONVENTIONAL Document type PRODUCT SCHEMATIC	Document No 23970505	Issue 02	Volume 1 (1)	Page 2 (104)

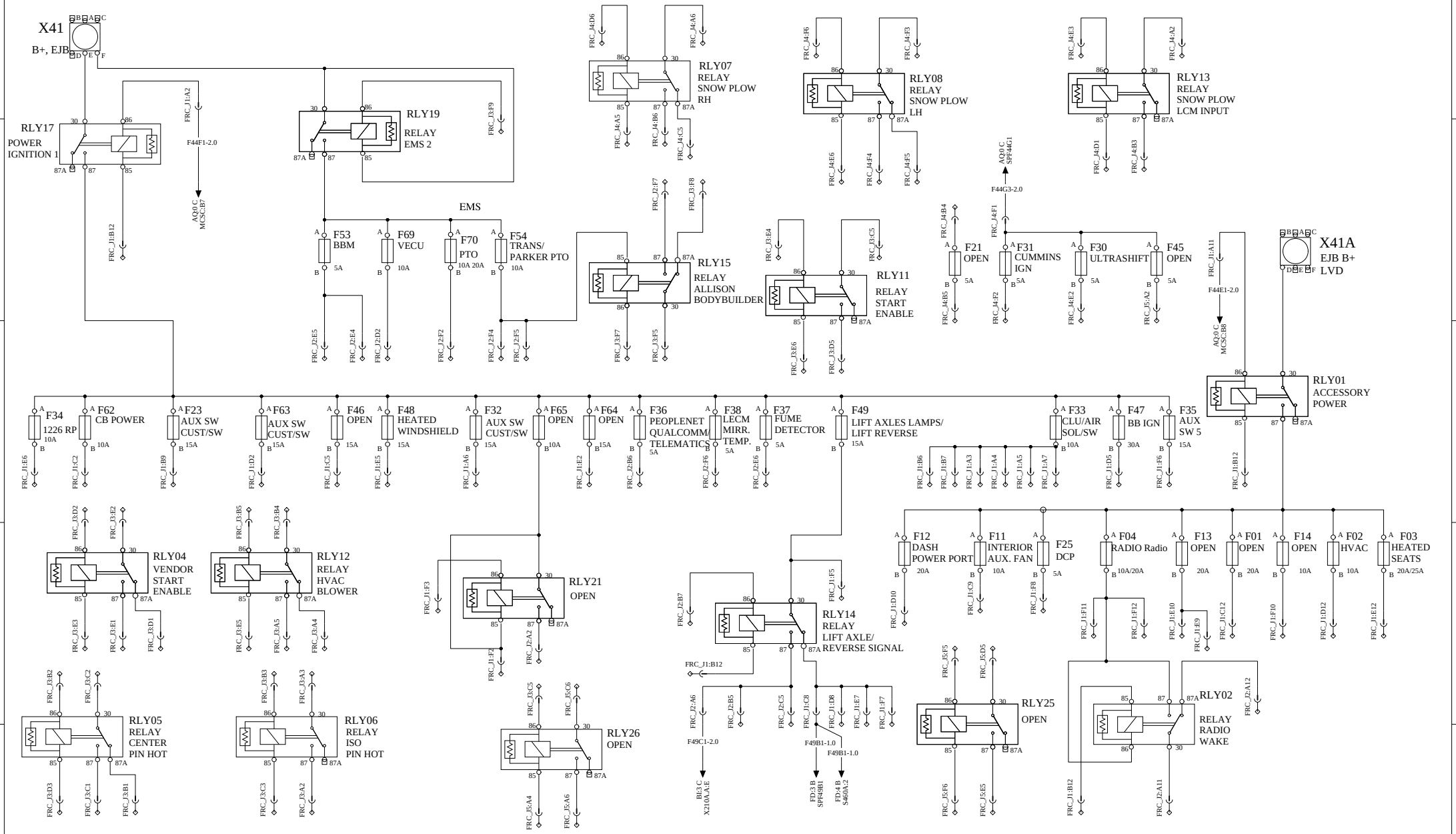

Volvo Truck Corporation	Document title WIRING DIAGRAM, 12V MACK CONVENTIONAL Document type PRODUCT SCHEMATIC	Document No 23970505	Issue 02	Volume 1 (1)	Page 3 (104)

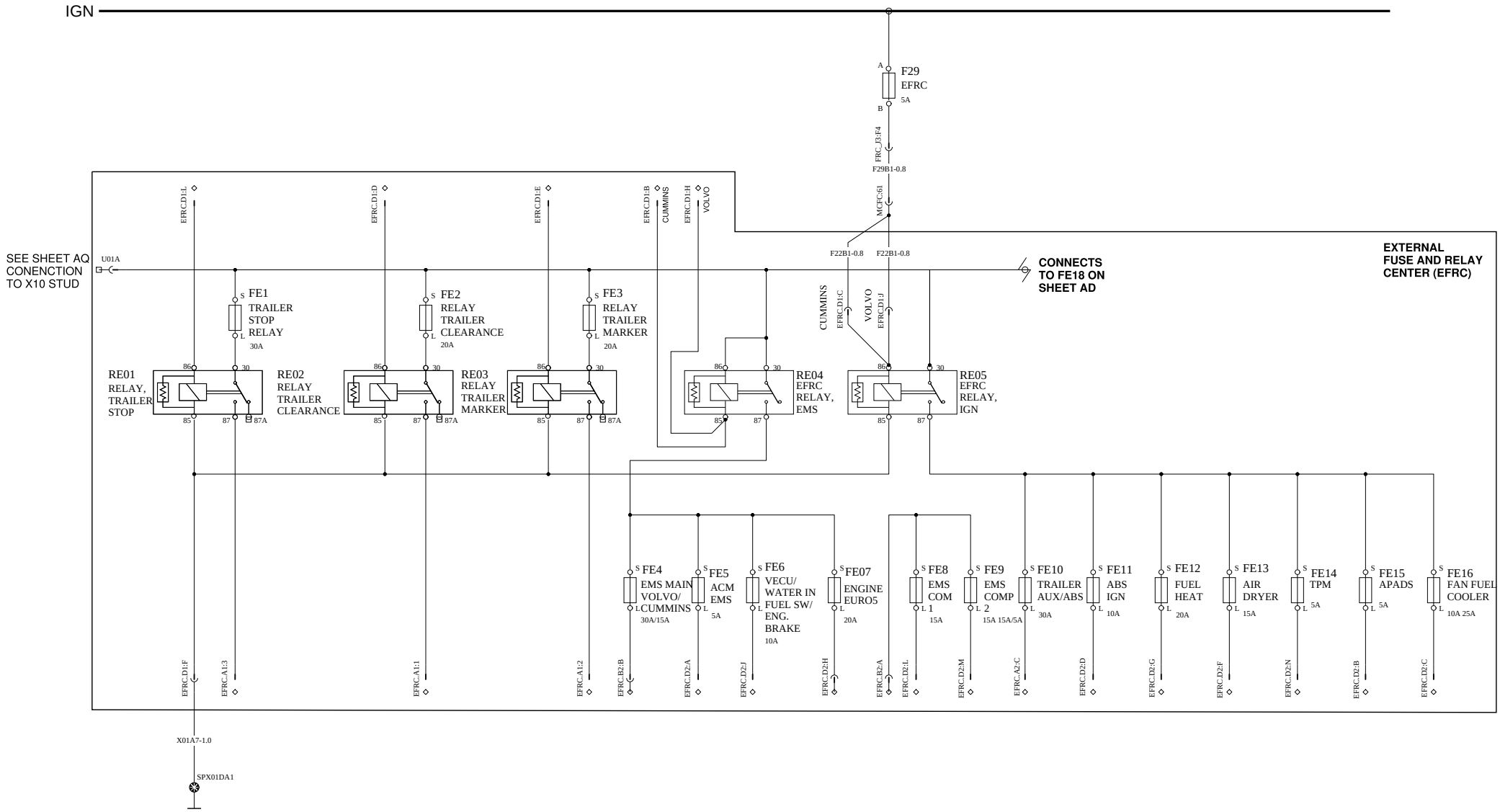

	Document title	Document No	Issue	Volume	Page
Volvo Truck Corporation	WIRING DIAGRAM, 12V MACK CONVENTIONAL Document type PRODUCT SCHEMATIC	23970505	02	1 (1)	4 (104)

POWER DISTRIBUTION EFRC 2/2

WIRING DIAGRAM: AD

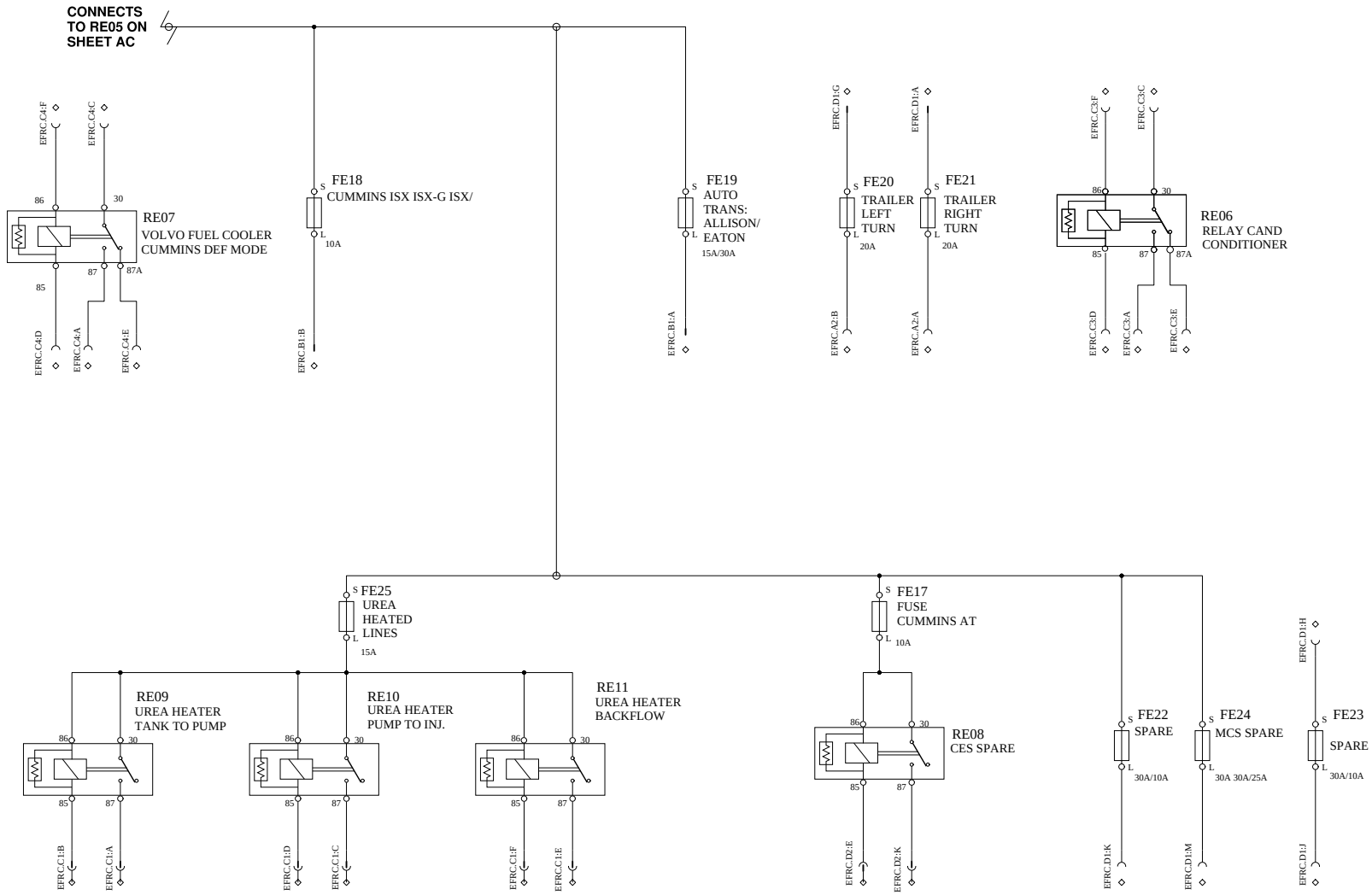

Volvo Truck Corporation	Document title WIRING DIAGRAM, 12V MACK CONVENTIONAL Document type PRODUCT SCHEMATIC	Document No 23970505	Issue 02	Volume 1 (1)	Page 5 (104)

GROUNDING

WIRING DIAGRAM: AE

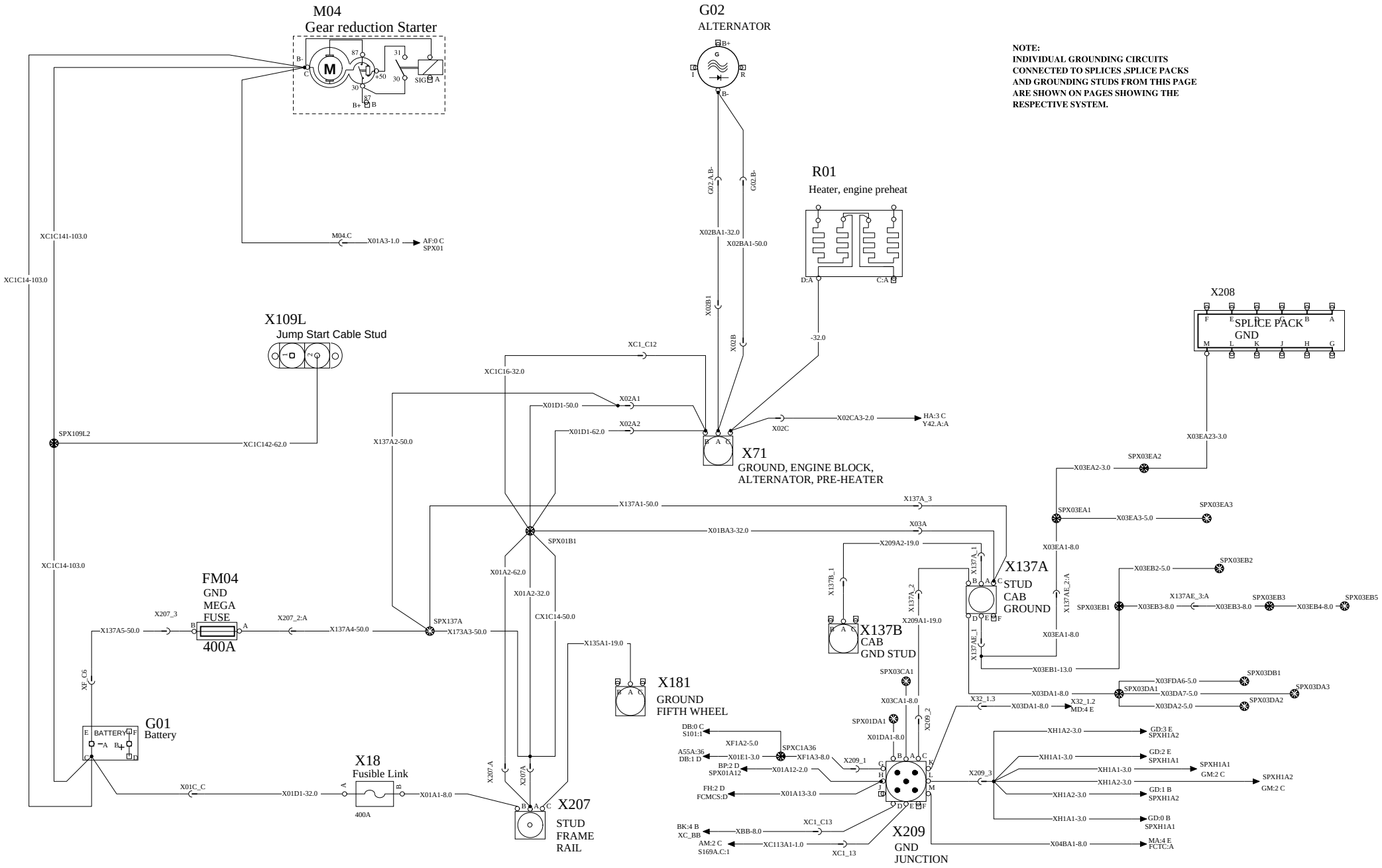

Volvo Truck Corporation	Document title: WIRING DIAGRAM, 12V MACK CONVENTIONAL Document type: PRODUCT SCHEMATIC	Document No: 23970505	Issue: 02	Volume: 1 (1)	Page: 6 (104)

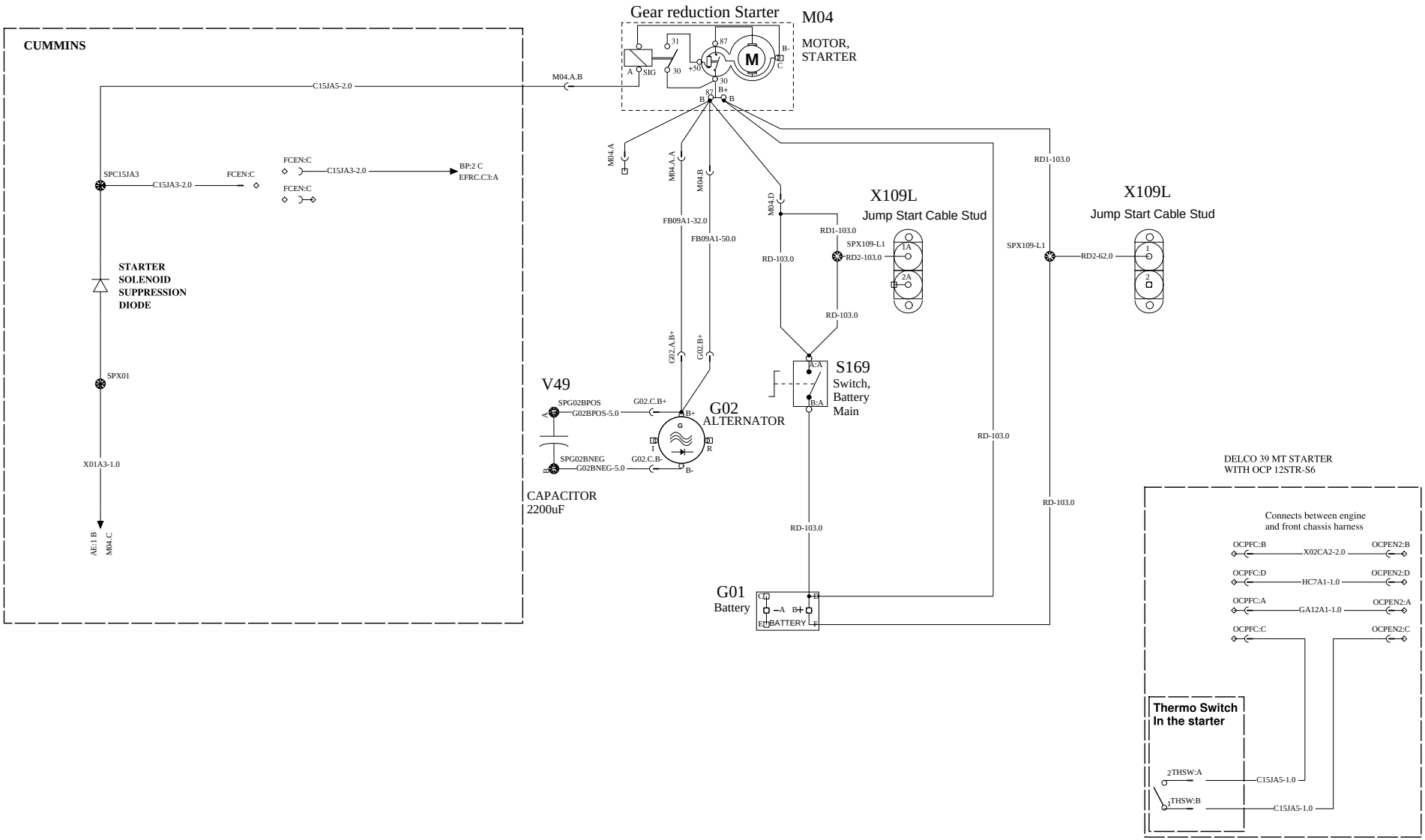

Volvo Truck Corporation	Document title WIRING DIAGRAM, 12V MACK CONVENTIONAL Document type PRODUCT SCHEMATIC	Document No 23970505	Issue 02	Volume 1 (1)	Page 7 (104)

VEHICLE ECU 1/3 EMS POWER CONTROL

WIRING DIAGRAM: AG

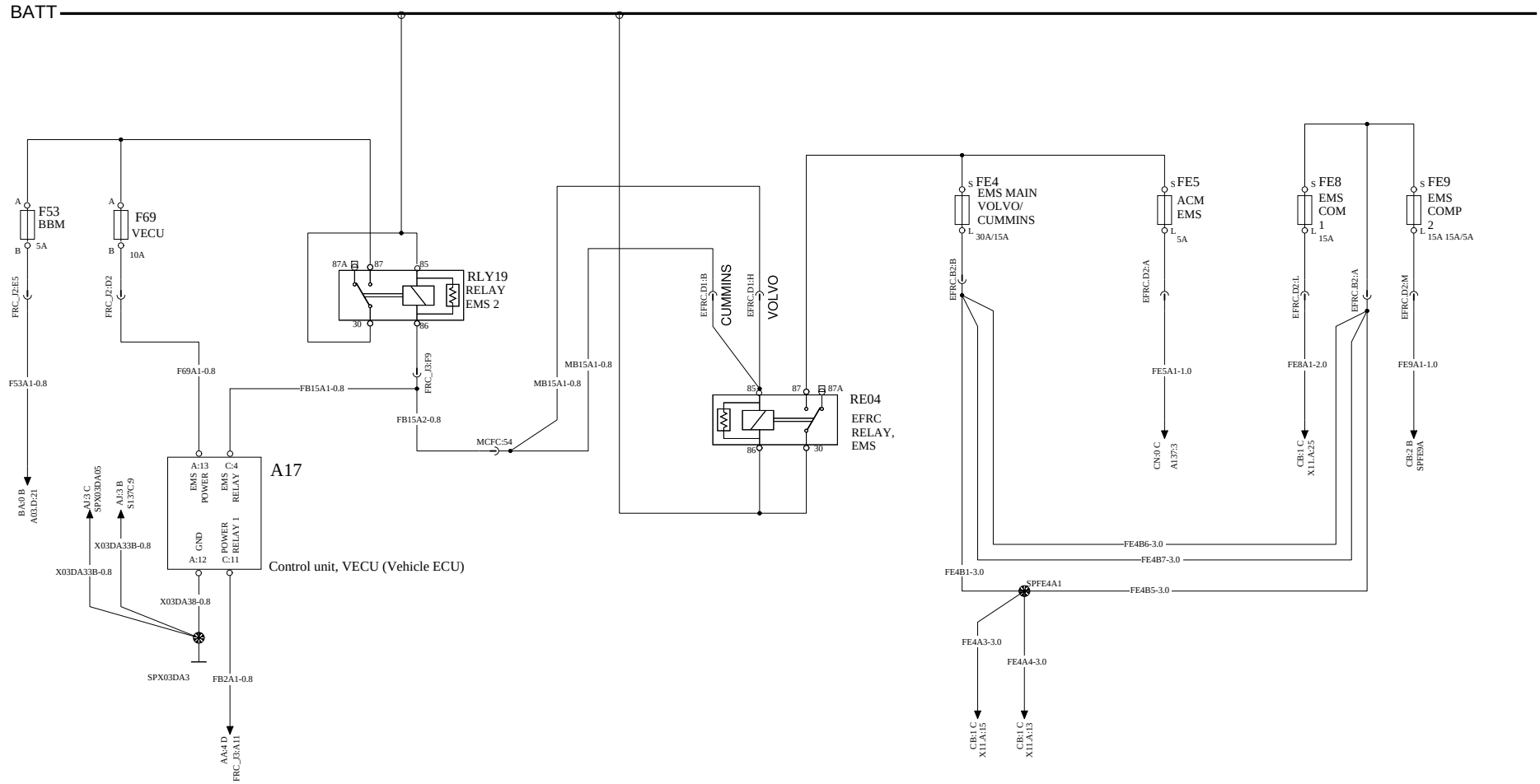

Volvo Truck Corporation	Document title WIRING DIAGRAM, 12V MACK CONVENTIONAL Document type PRODUCT SCHEMATIC	Document No 23970505	Issue 02	Volume 1 (1)	Page 8 (104)

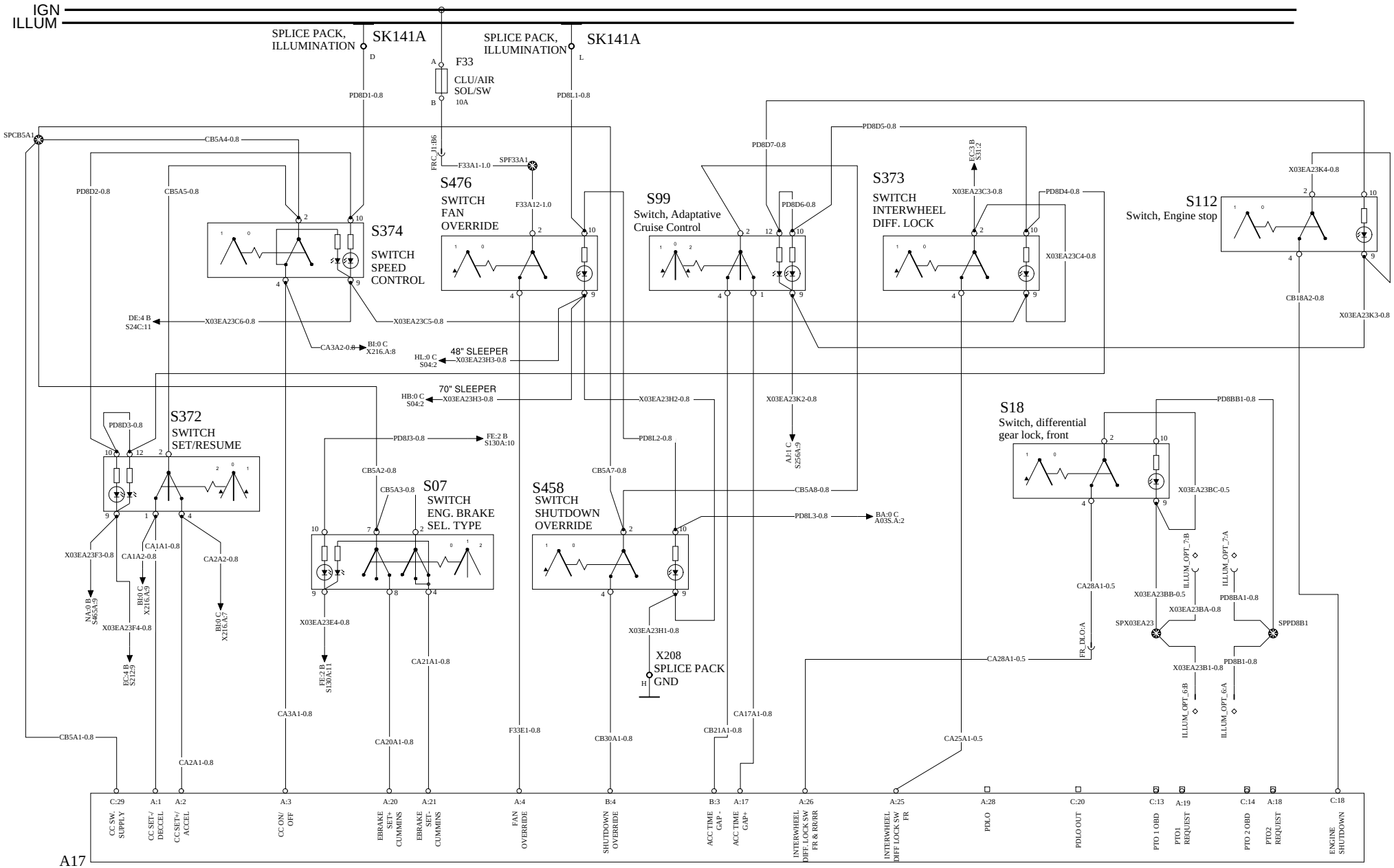

Volvo Truck Corporation	Document title: WIRING DIAGRAM, 12V MACK CONVENTIONAL Document type: PRODUCT SCHEMATIC	Document No: 23970505	Issue: 02	Volume: 1 (1)	Page: 9 (104)

VEHICLE ECU 3/3

WIRING DIAGRAM: AI

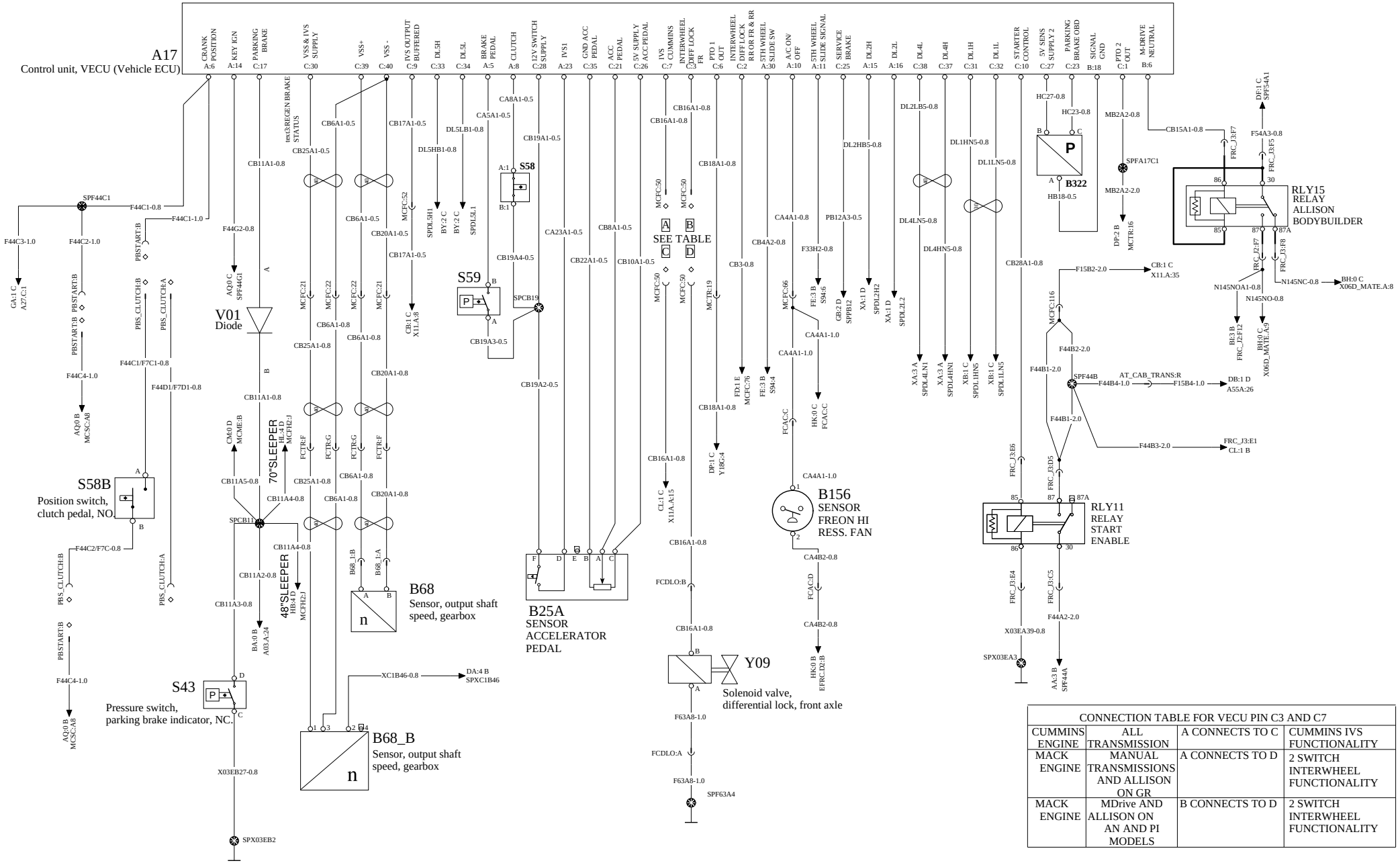

CONNECTION TABLE FOR VECU PIN C3 AND C7			
CUMMINS ENGINE	ALL TRANSMISSION	A CONNECTS TO C	CUMMINS IVS FUNCTIONALITY
MACK ENGINE	MANUAL TRANSMISSIONS AND ALLISON ON GR	A CONNECTS TO D	2 SWITCH INTERWHEEL FUNCTIONALITY
MACK ENGINE	MDrive AND ALLISON ON AN AND PI MODELS	B CONNECTS TO D	2 SWITCH INTERWHEEL FUNCTIONALITY

Volvo Truck Corporation	Document title: WIRING DIAGRAM, 12V MACK CONVENTIONAL	Document No	Issue	Volume	Page
	Document type: PRODUCT SCHEMATIC	23970505	02	1 (1)	10 (104)

VECU, PTO AND PDLO SWITCHES

WIRING DIAGRAM: AJ

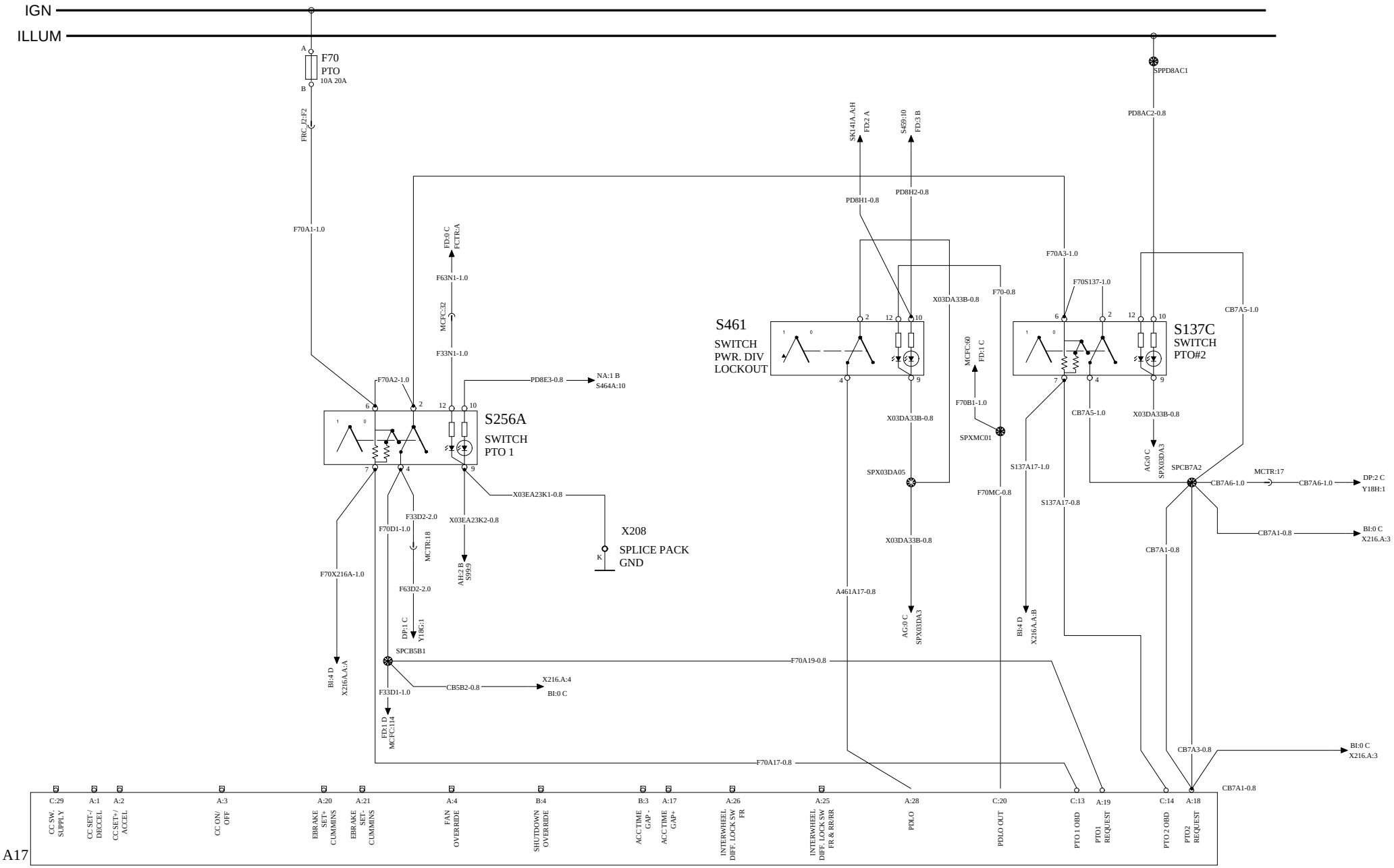

Control unit, VECU (Vehicle ECU)

	Document title	Document No	Issue	Volume	Page
Volvo Truck Corporation	WIRING DIAGRAM, 12V MACK CONVENTIONAL Document type PRODUCT SCHEMATIC	23970505	02	1 (1)	11 (104)

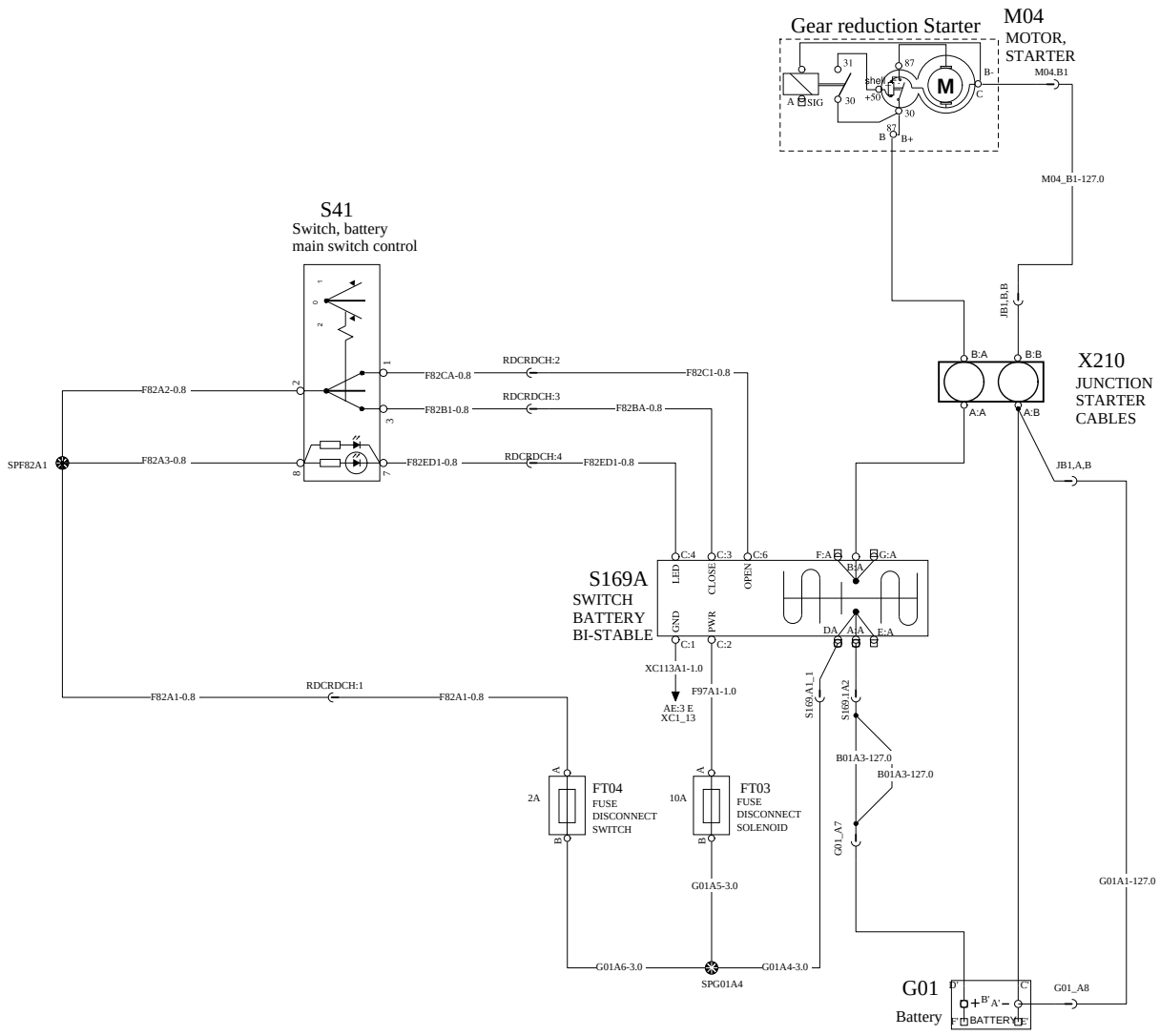

Volvo Truck Corporation	Document title: WIRING DIAGRAM, 12V MACK CONVENTIONAL Document type: PRODUCT SCHEMATIC	Document No: 23970505	Issue: 02	Volume: 1 (1)	Page: 12 (104)

POWER DISTRIBUTION / KEY SWITCH

WIRING DIAGRAM: AQ

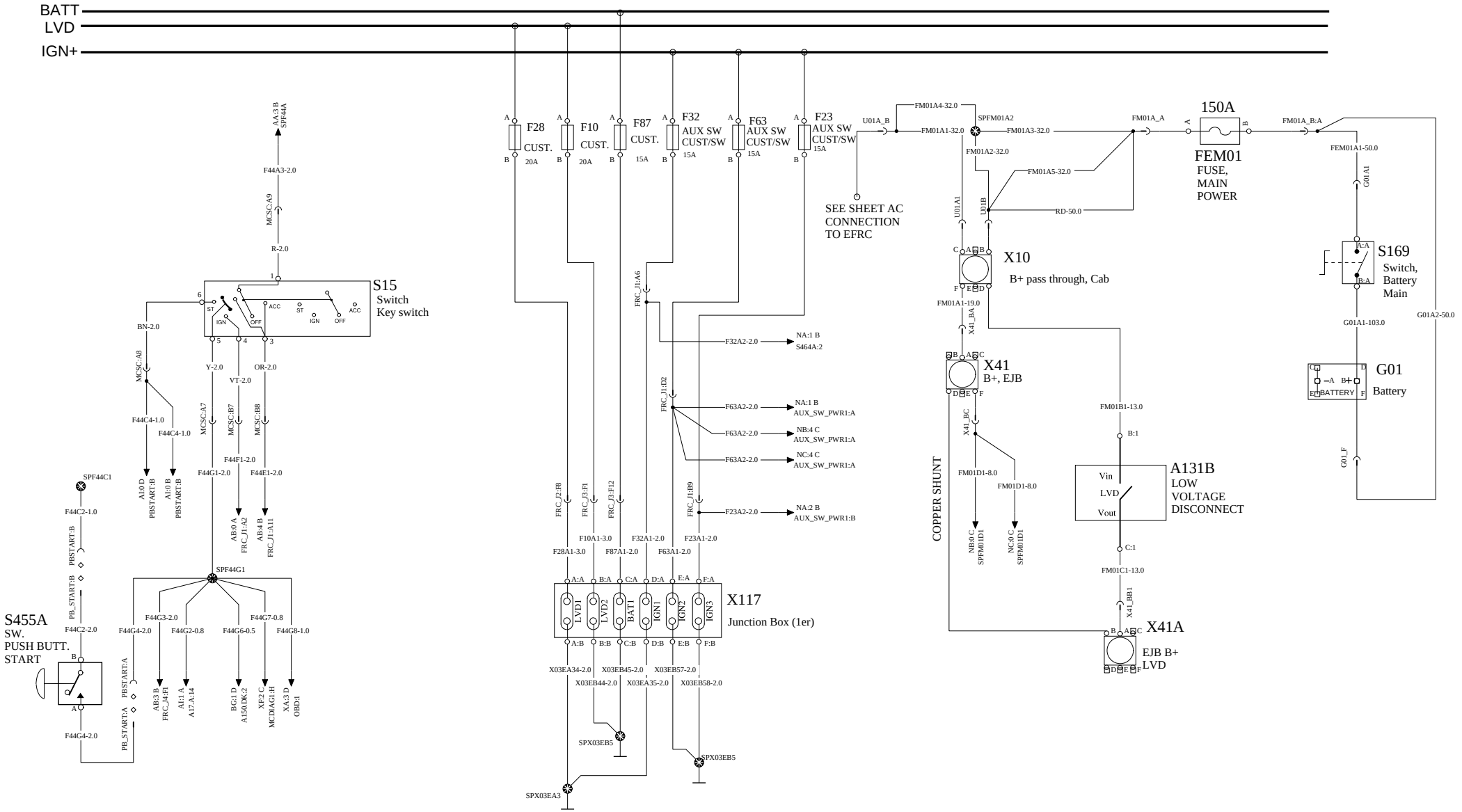

Volvo Truck Corporation	Document title WIRING DIAGRAM, 12V MACK CONVENTIONAL Document type PRODUCT SCHEMATIC	Document No 23970505	Issue 02	Volume 1 (1)	Page 13 (104)

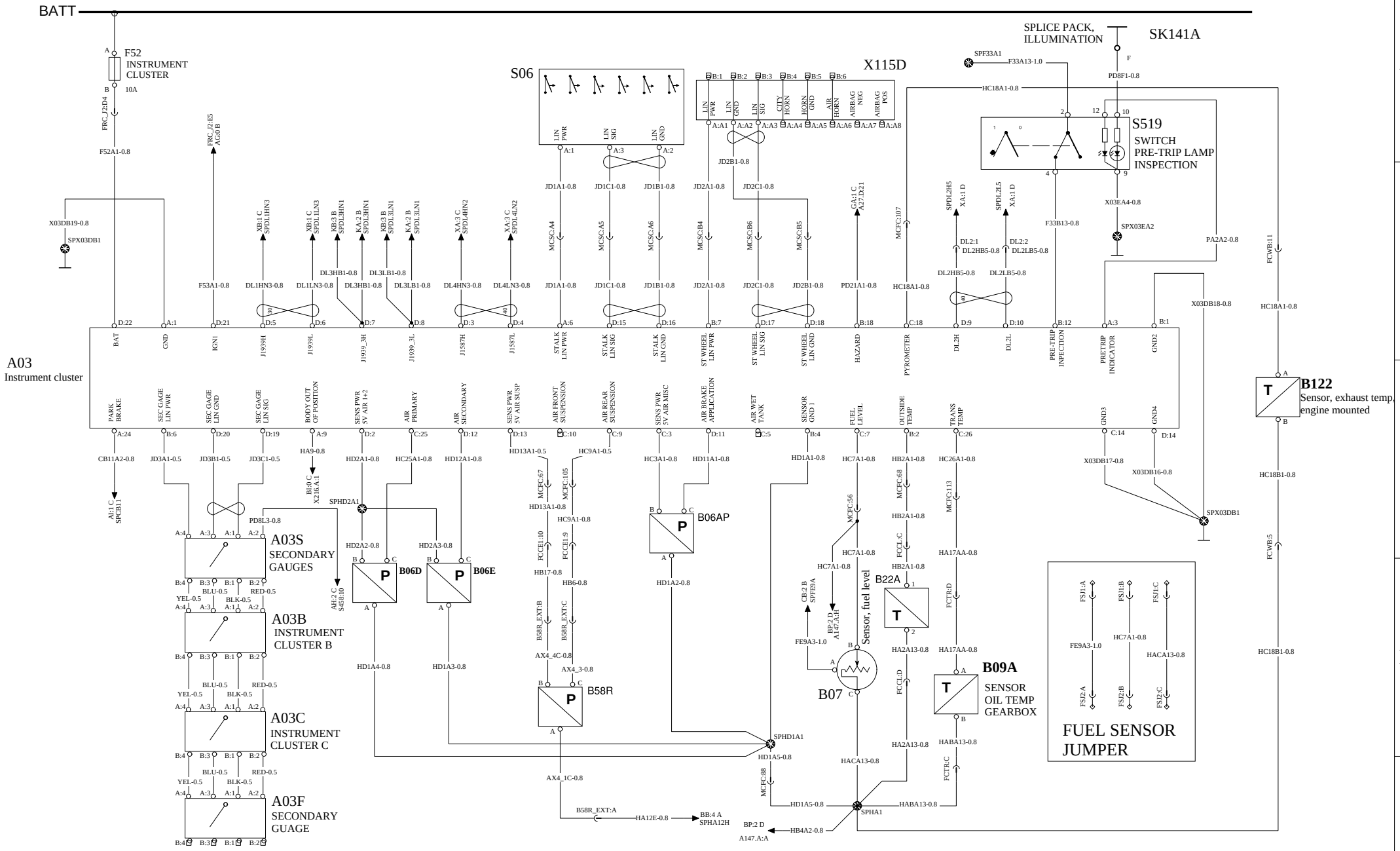

Volvo Truck Corporation	Document title: WIRING DIAGRAM, 12V MACK CONVENTIONAL Document type: PRODUCT SCHEMATIC	Document No: 23970505	Issue: 02	Volume: 1 (1)	Page: 14 (104)

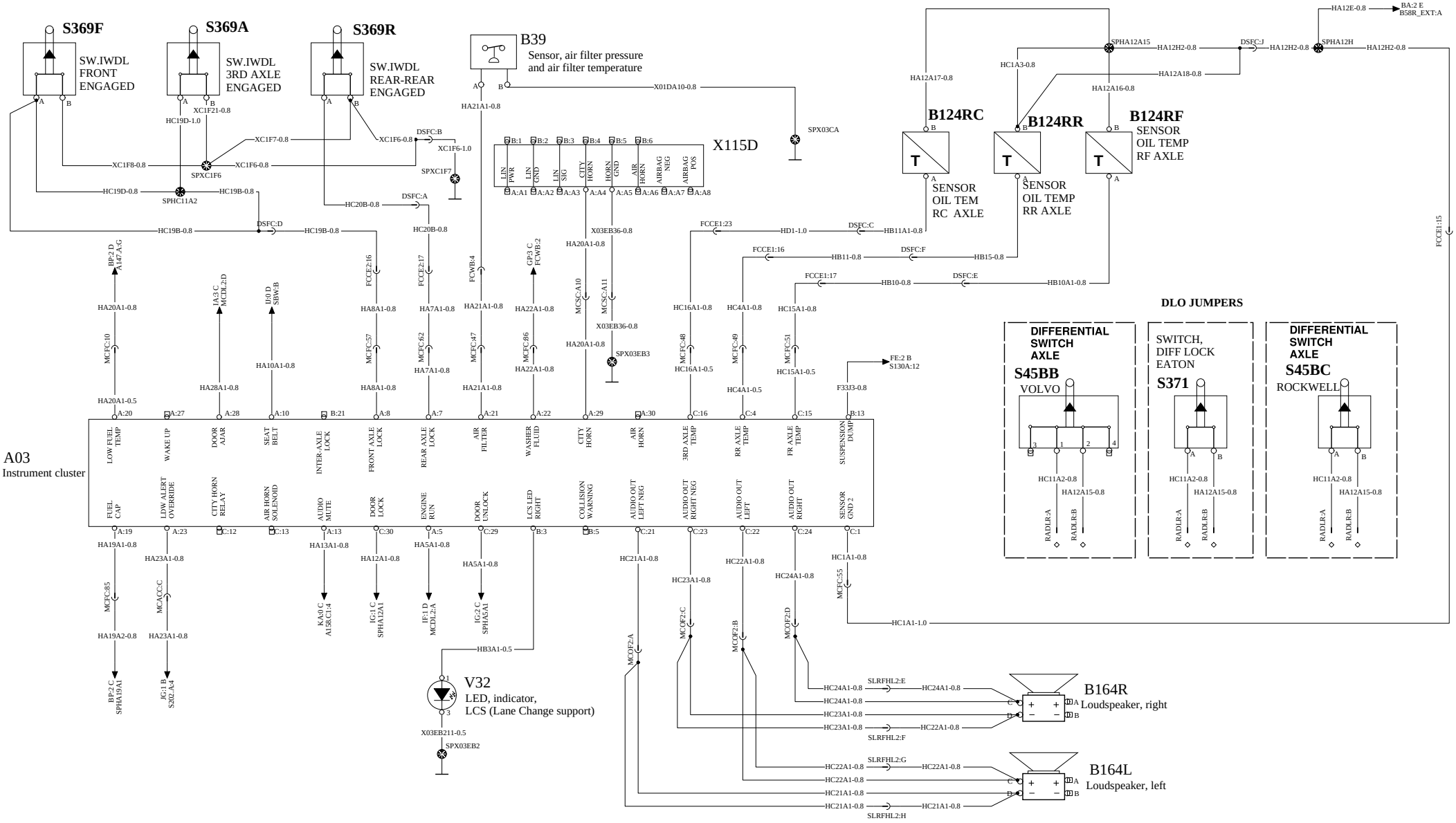

Volvo Truck Corporation	Document title: WIRING DIAGRAM, 12V MACK CONVENTIONAL Document type: PRODUCT SCHEMATIC	Document No: 23970505	Issue: 02	Volume: 1 (1)	Page: 15 (104)

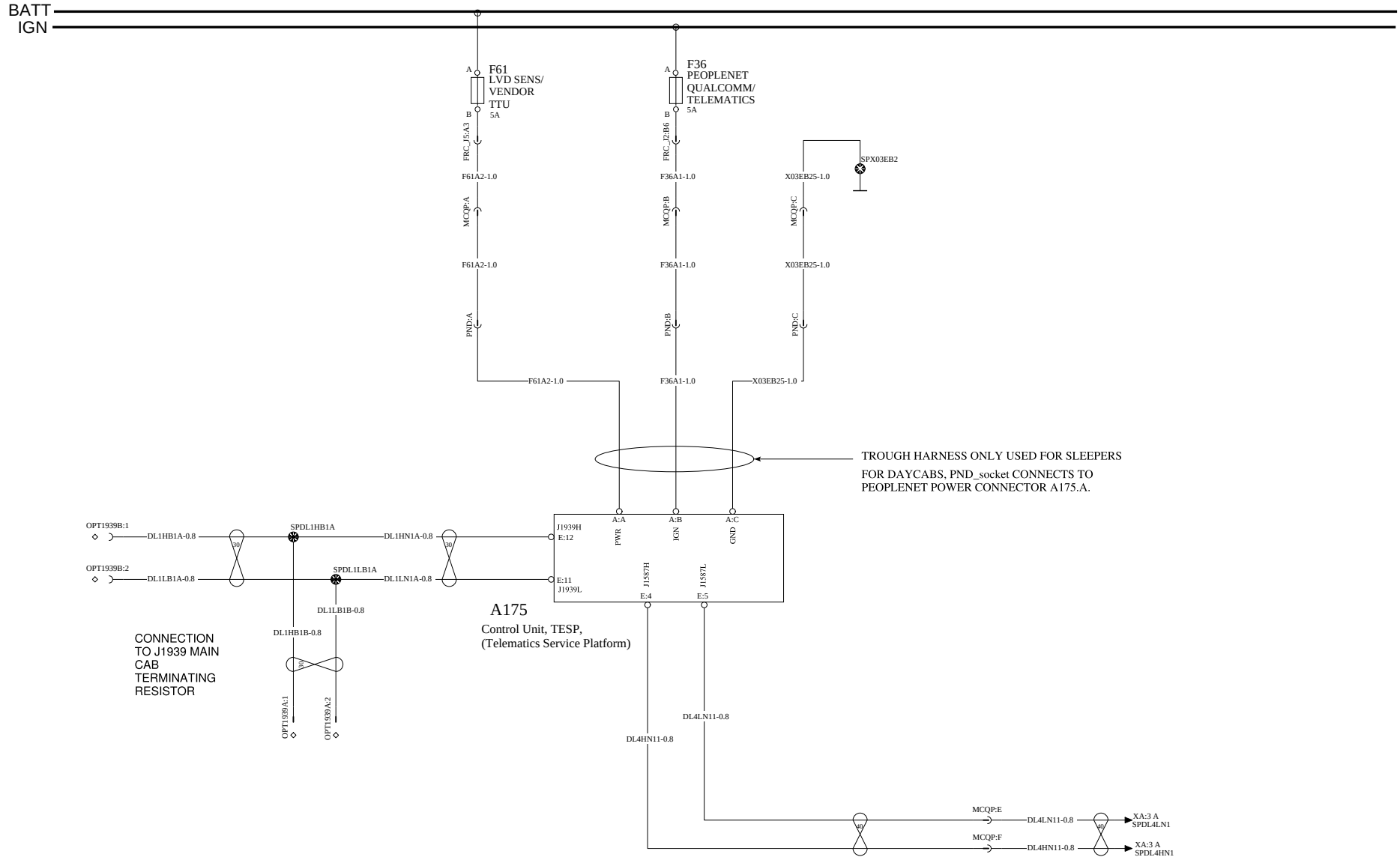

Volvo Truck Corporation	Document title WIRING DIAGRAM, 12V MACK CONVENTIONAL Document type PRODUCT SCHEMATIC	Document No 23970505	Issue 02	Volume 1 (1)	Page 16 (104)

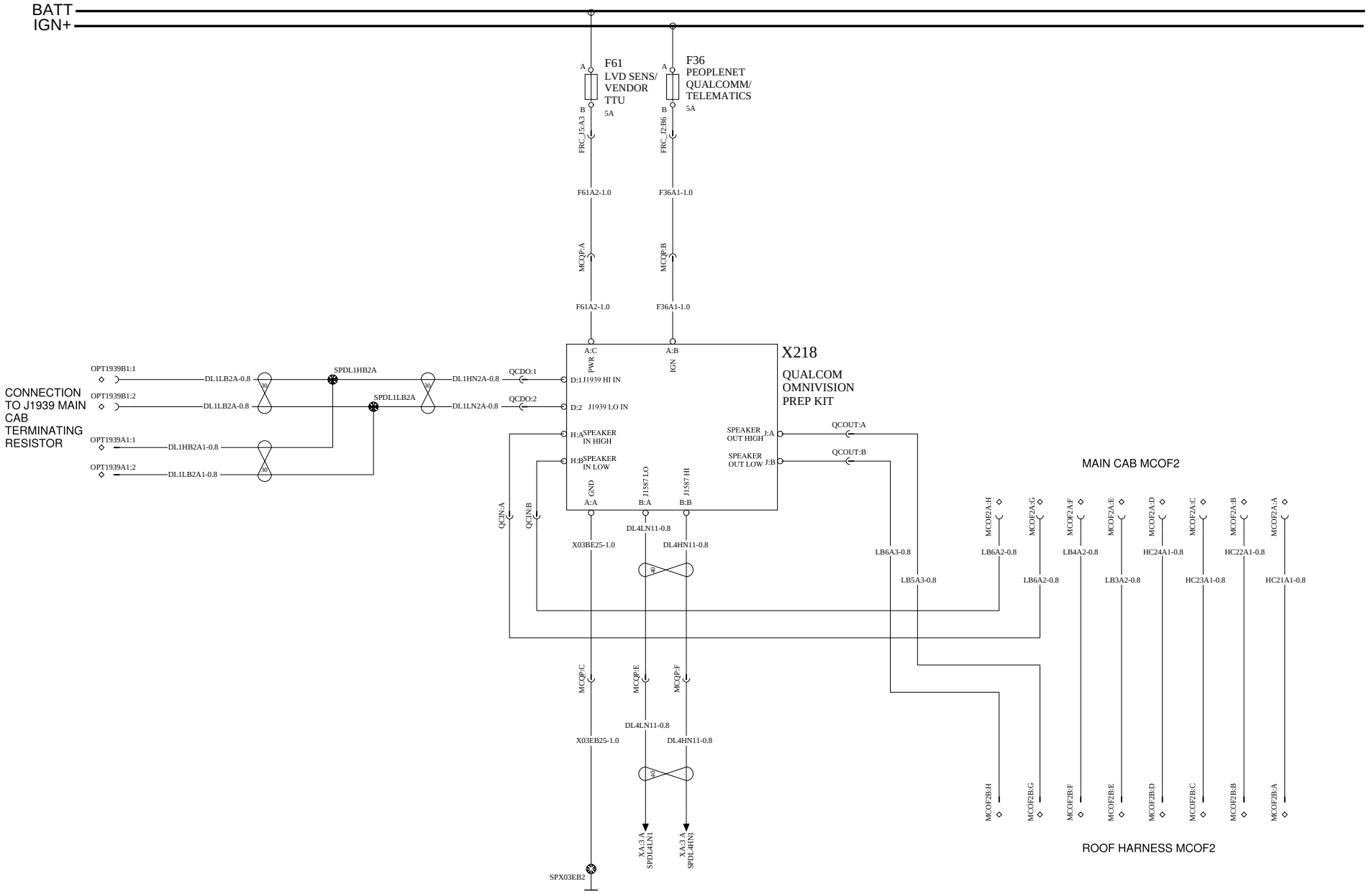
BATT
IGN+
F61
LVD SENS/
VENDOR
TTU
5A
F36
PEOPLENET
QUALCOMM/
TELEMATICS
5A
FRC_J5:A3
FRC_J2:B6
F61A2-1.0
F36A1-1.0
MCQP:A
MCQP:B
X218
QUALCOM
OMNIVISION
PREP KIT
PWR
IGN
D:1 J1939 HI IN
D:2 J1939 LO IN
SPEAKER IN HIGH
SPEAKER IN LOW
SPEAKER OUT HIGH
SPEAKER OUT LOW
GND
J1587 LO
J1587 HI
CONNECTION
TO J1939 MAIN
CAB
TERMINATING
RESISTOR
OPT1939B1:1
OPT1939B1:2
OPT1939A1:1
OPT1939A1:2
DL1LB2A-0.8
DL1LB2A1-0.8
SPDL1HB2A
SPDL1LB2A
DL1HN2A-0.8
DL1LN2A-0.8
QCDO:1
QCDO:2
QCOUT:A
QCOUT:B
QCIN:A
QCIN:B
DL4LN11-0.8
DL4HN11-0.8
X03BE25-1.0
X03EB25-1.0
MCQP:C
MCQP:E
MCQP:F
XA:3 A
SPDL4LN1
SPDL4HN
SPX03EB2
MAIN CAB MCOF2
MCOF2A:H
MCOF2A:G
MCOF2A:F
MCOF2A:E
MCOF2A:D
MCOF2A:C
MCOF2A:B
MCOF2A:A
LB6A3-0.8
LB5A3-0.8
LB6A2-0.8
LB4A2-0.8
LB3A2-0.8
HC24A1-0.8
HC23A1-0.8
HC22A1-0.8
HC21A1-0.8
MCOF2B:H
MCOF2B:G
MCOF2B:F
MCOF2B:E
MCOF2B:D
MCOF2B:C
MCOF2B:B
MCOF2B:A
ROOF HARNESS MCOF2

TELEMATICS GATEWAY (TGW)

WIRING DIAGRAM: BG

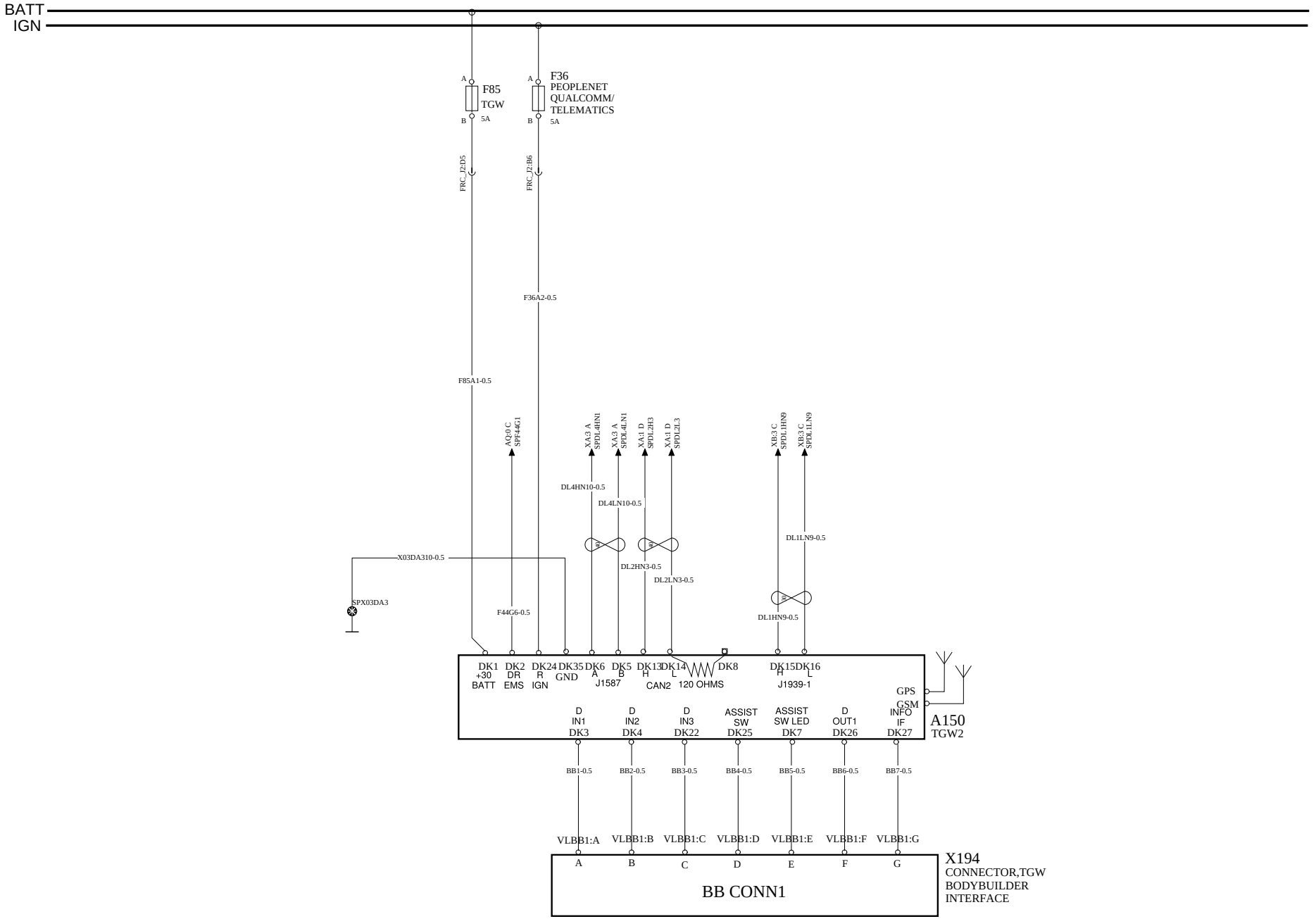

Volvo Truck Corporation	Document title WIRING DIAGRAM, 12V MACK CONVENTIONAL Document type PRODUCT SCHEMATIC	Document No 23970505	Issue 02	Volume 1 (1)	Page 18 (104)

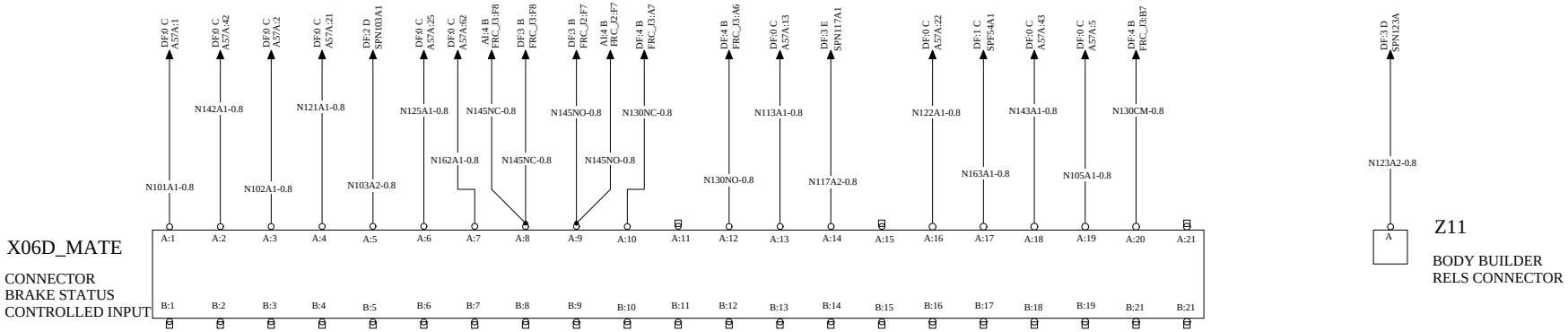

Volvo Truck Corporation	Document title WIRING DIAGRAM, 12V MACK CONVENTIONAL Document type PRODUCT SCHEMATIC	Document No 23970505	Issue 02	Volume 1 (1)	Page 19 (104)

BODY BUILDER CAB INTERFACE

WIRING DIAGRAM: BI

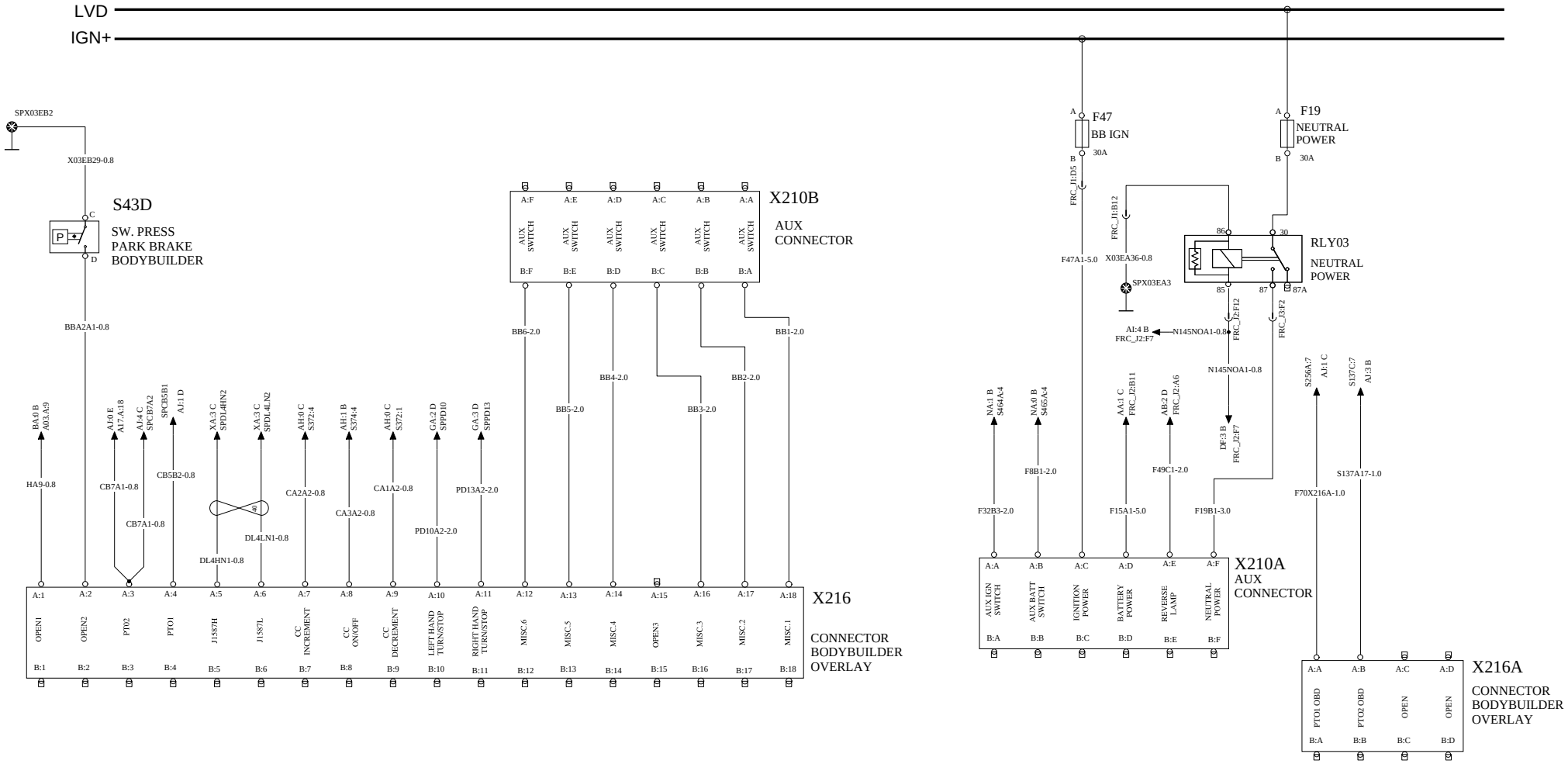

	Document title	Document No	Issue	Volume	Page
Volvo Truck Corporation	WIRING DIAGRAM, 12V MACK CONVENTIONAL Document type PRODUCT SCHEMATIC	23970505	02	1 (1)	20 (104)

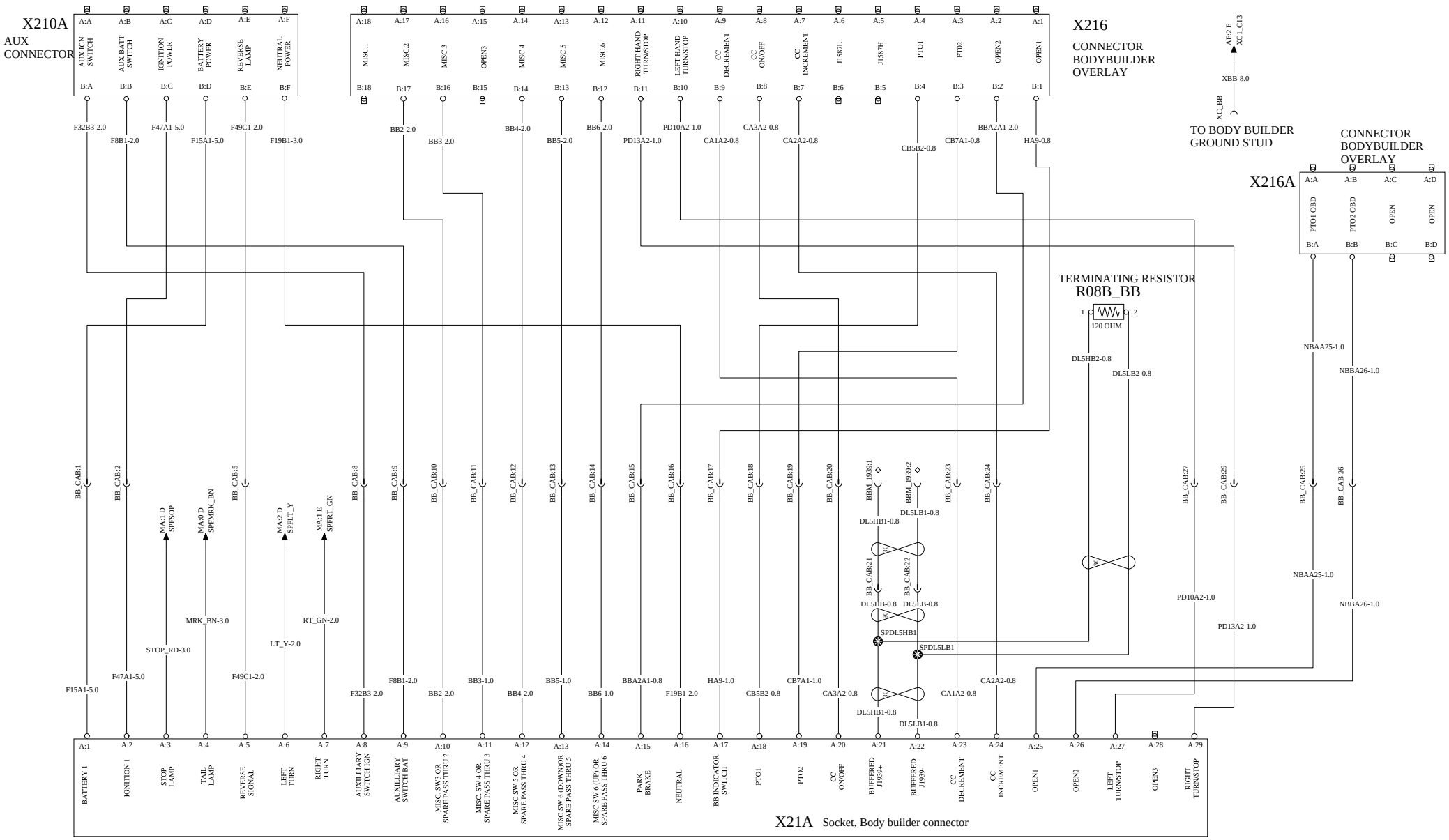

Volvo Truck Corporation	Document title: WIRING DIAGRAM, 12V MACK CONVENTIONAL Document type: PRODUCT SCHEMATIC	Document No: 23970505	Issue: 02	Volume: 1 (1)	Page: 21 (104)

BATTERY BUSSING

WIRING DIAGRAM: BL

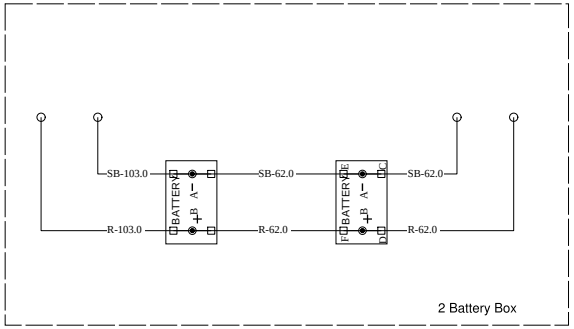

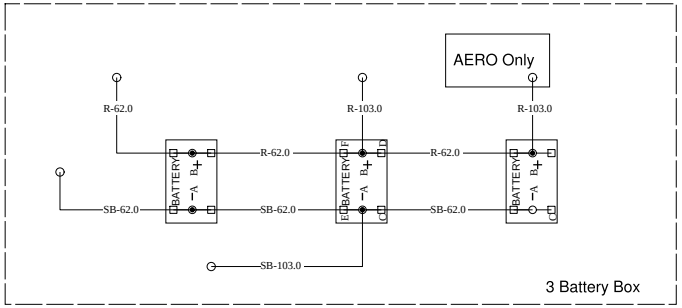

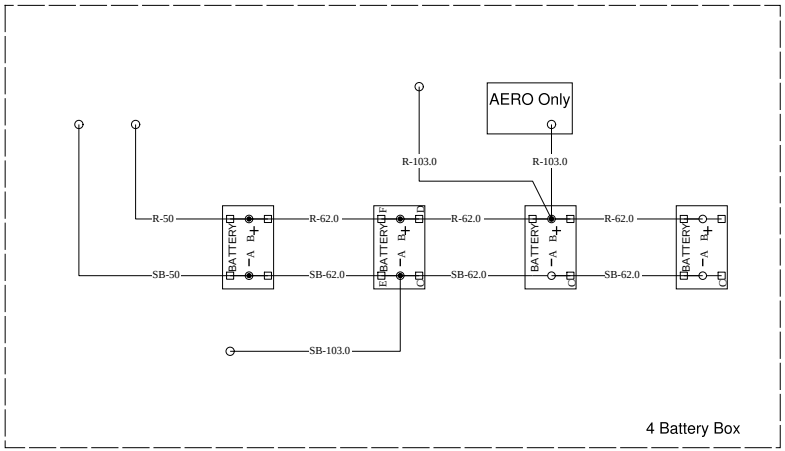

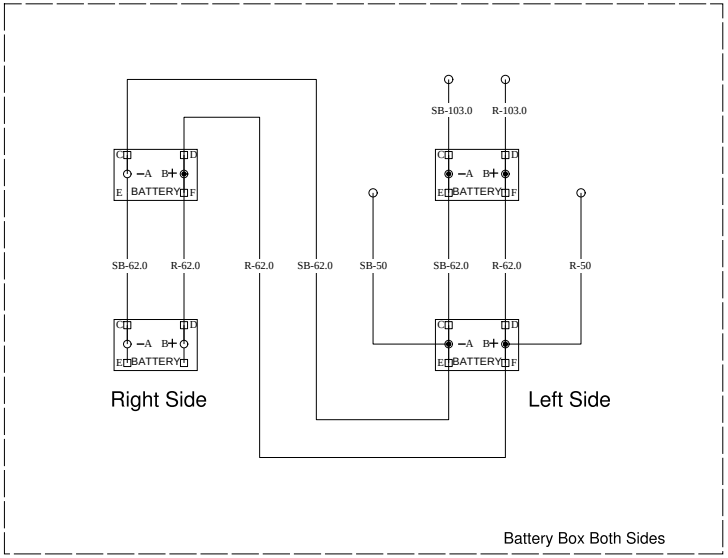

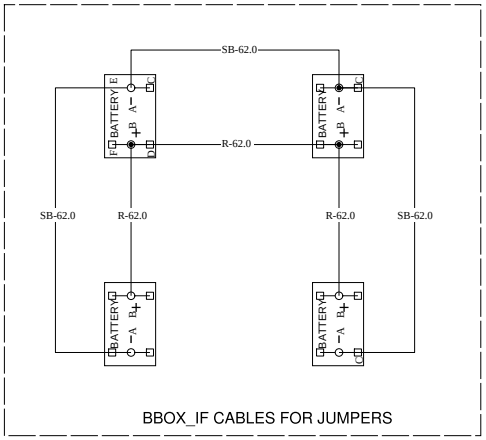

	Document title	Document No	Issue	Volume	Page
Volvo Truck Corporation	WIRING DIAGRAM, 12V MACK CONVENTIONAL Document type PRODUCT SCHEMATIC	23970505	02	1 (1)	22 (104)

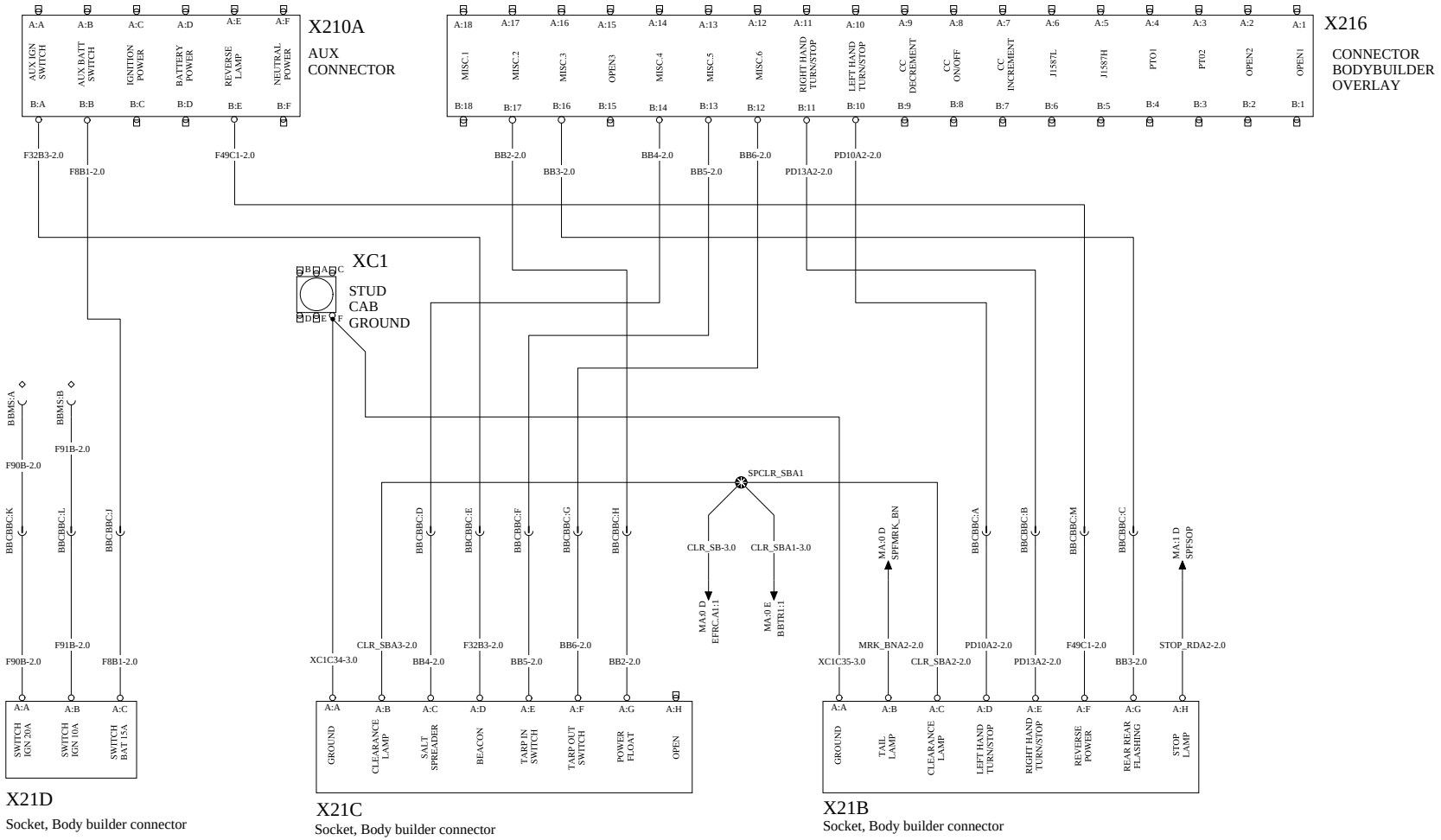
X210A
AUX CONNECTOR
A:A AUX IGN SWITCH B:A
A:B AUX BATT SWITCH B:B
A:C IGNITION POWER B:C
A:D BATTERY POWER B:D
A:E REVERSE LAMP B:E
A:F NEUTRAL POWER B:F
X216
CONNECTOR BODYBUILDER OVERLAY
A:18 MISC.1 B:18
A:17 MISC.2 B:17
A:16 MISC.3 B:16
A:15 OPEN3 B:15
A:14 MISC.4 B:14
A:13 MISC.5 B:13
A:12 MISC.6 B:12
A:11 RIGHT HAND TURN/STOP B:11
A:10 LEFT HAND TURN/STOP B:10
A:9 CC DECREMENT B:9
A:8 CC ON/OFF B:8
A:7 CC INCREMENT B:7
A:6 J1587L B:6
A:5 J1587H B:5
A:4 PTO1 B:4
A:3 PTO2 B:3
A:2 OPEN2 B:2
A:1 OPEN1 B:1
F32B3-2.0
F8B1-2.0
F49C1-2.0
BB2-2.0
BB3-2.0
BB4-2.0
BB5-2.0
BB6-2.0
PD13A2-2.0
PD10A2-2.0
XC1
STUD CAB GROUND
A B C D E F
BBM5:A
BBM5:B
F91B-2.0
F90B-2.0
BBCBBC:K
BBCBBC:L
BBCBBC:J
SPCLR_SBA1
BBCBBC:D
BBCBBC:E
BBCBBC:F
BBCBBC:G
BBCBBC:H
CLR_SB-3.0
CLR_SBA1-3.0
MA:0 D EFRC:A1:1
MA:0 E BBTR1:1
MA:0 D SPFMRK_BN
BBCBBC:A
BBCBBC:B
BBCBBC:M
BBCBBC:C
MA:1 D SPFSOP
CLR_SBA3-2.0
XC1C34-3.0
MRK_BNA2-2.0
XC1C35-3.0
CLR_SBA2-2.0
STOP_RDA2-2.0
A:A SWITCH IGN 20A
A:B SWITCH IGN 10A
A:C SWITCH BAT 15A
X21D
Socket, Body builder connector
A:A GROUND
A:B CLEARANCE LAMP
A:C SALT SPREADER
A:D BEACON
A:E TARP IN SWITCH
A:F TARP OUT SWITCH
A:G POWER FLOAT
A:H OPEN
X21C
Socket, Body builder connector
A:A GROUND
A:B TAIL LAMP
A:C CLEARANCE LAMP
A:D LEFT HAND TURN/STOP
A:E RIGHT HAND TURN/STOP
A:F REVERSE POWER
A:G REAR REAR FLASHING
A:H STOP LAMP
X21B
Socket, Body builder connector

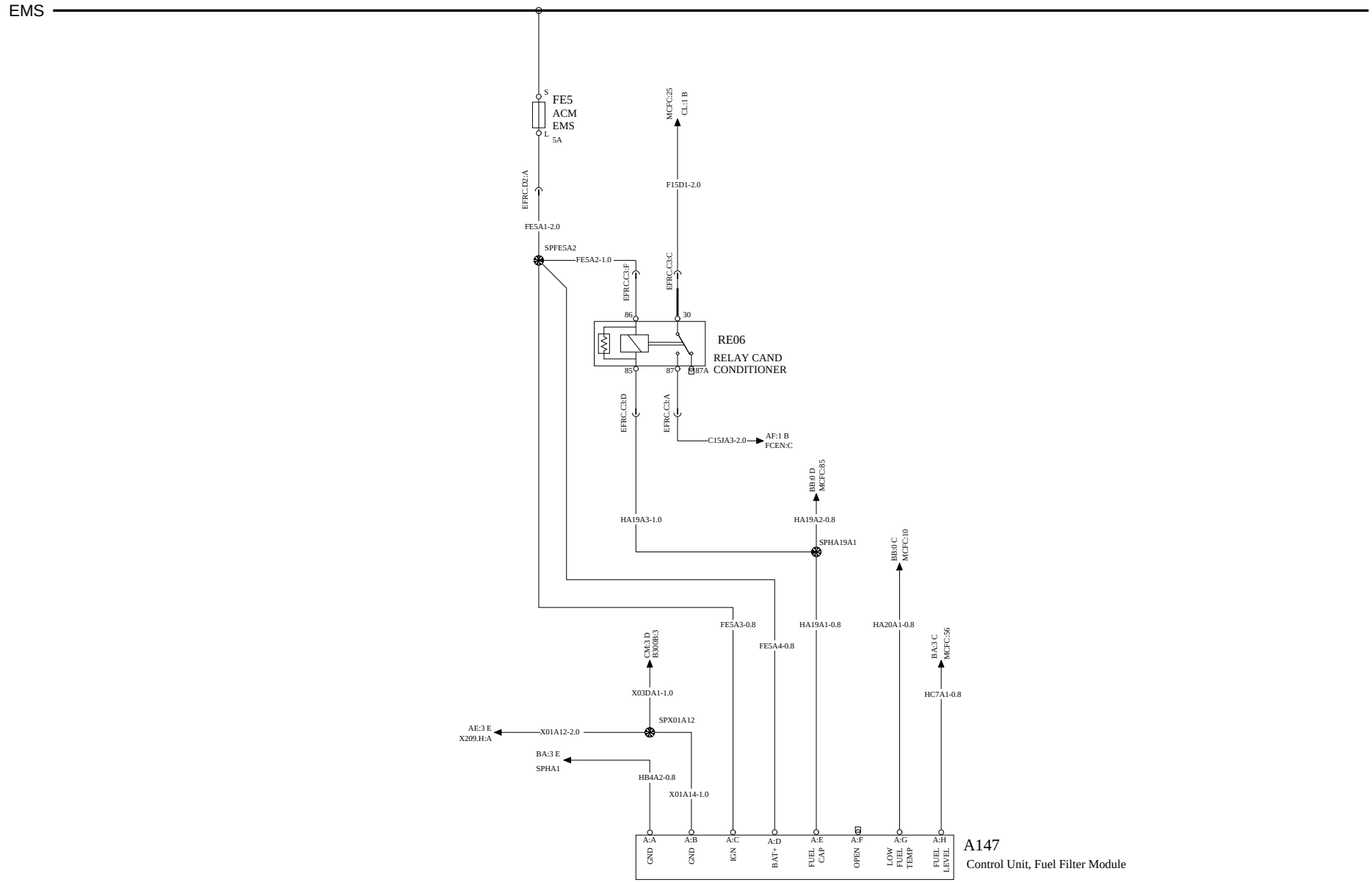

Volvo Truck Corporation	Document title WIRING DIAGRAM, 12V MACK CONVENTIONAL Document type PRODUCT SCHEMATIC	Document No 23970505	Issue 02	Volume 1 (1)	Page 24 (104)

TMC RP 1226 CONNECTORS

WIRING DIAGRAM : BY

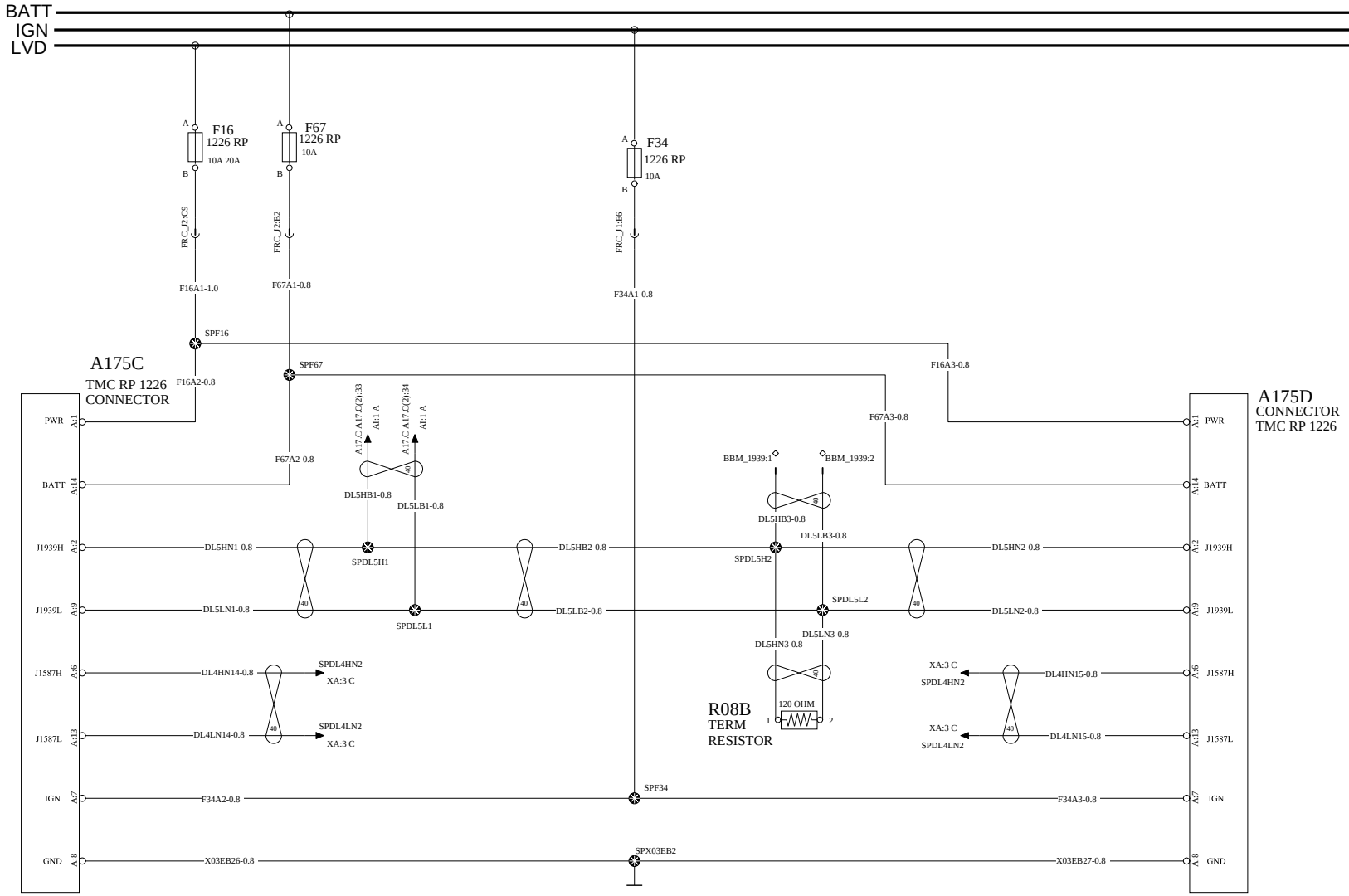

Volvo Truck Corporation	Document title WIRING DIAGRAM, 12V MACK CONVENTIONAL Document type PRODUCT SCHEMATIC	Document No 23970505	Issue 02	Volume 1 (1)	Page 25 (104)

ENGINE HEATER

WIRING DIAGRAM: CA

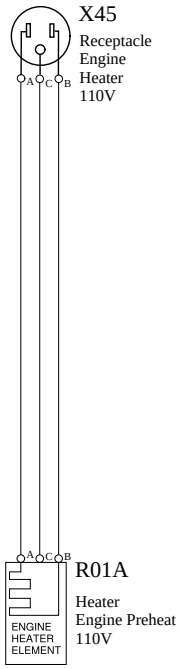

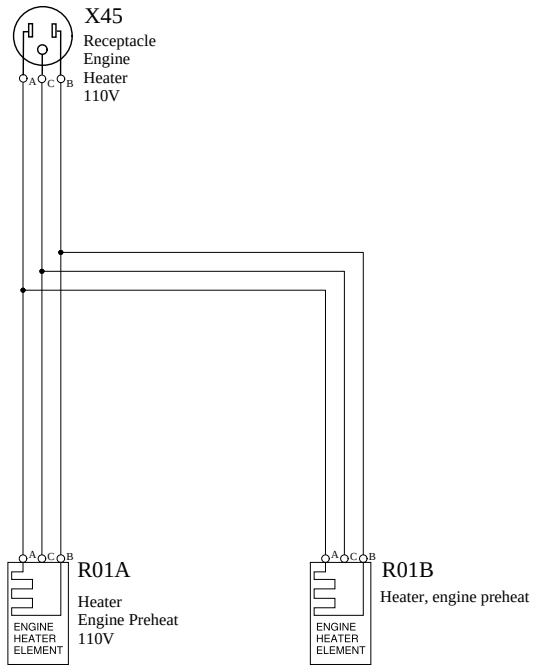

Volvo Truck Corporation	Document title WIRING DIAGRAM, 12V MACK CONVENTIONAL Document type PRODUCT SCHEMATIC	Document No 23970505	Issue 02	Volume 1 (1)	Page 26 (104)

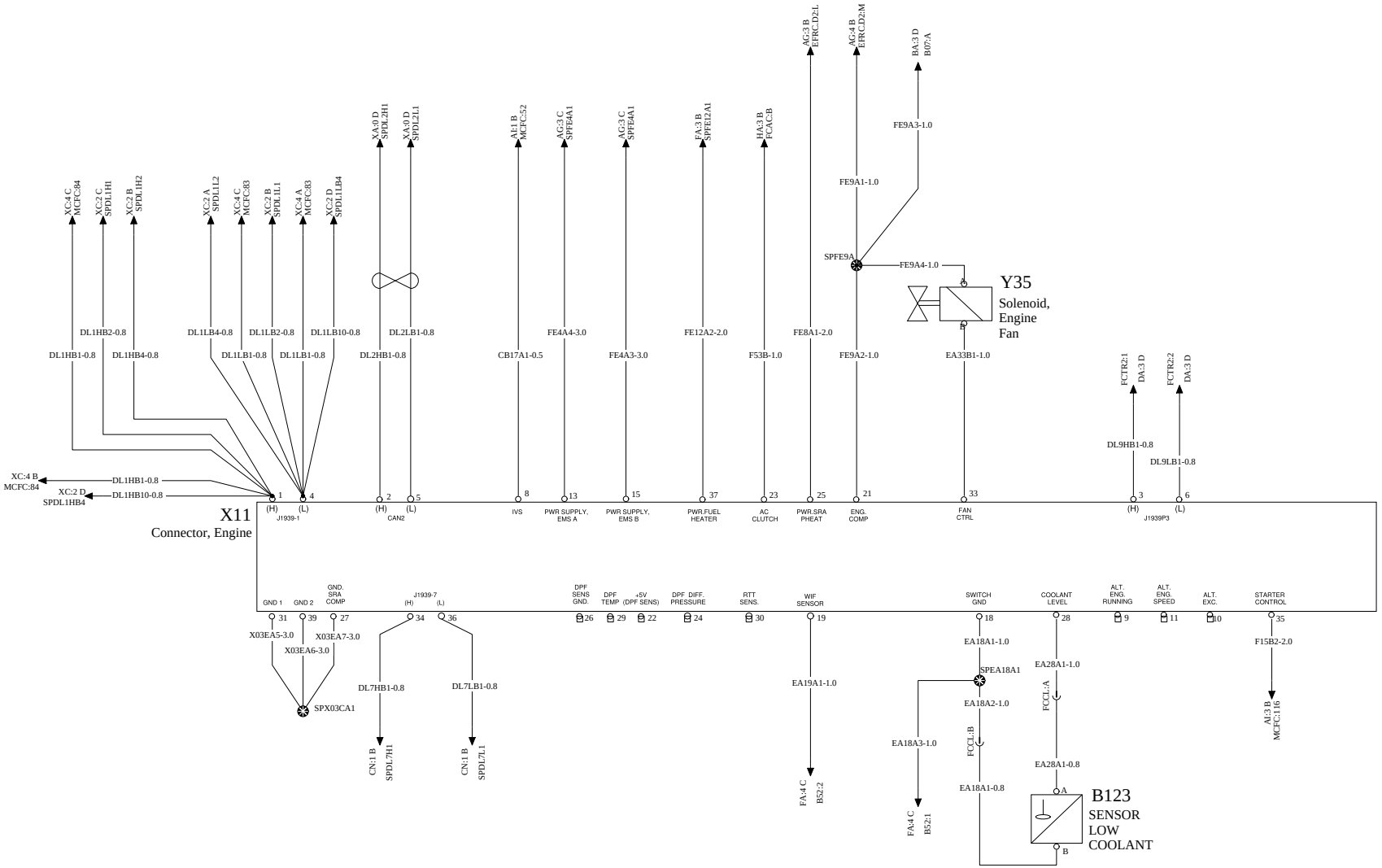

Volvo Truck Corporation	Document title: WIRING DIAGRAM, 12V MACK CONVENTIONAL Document type: PRODUCT SCHEMATIC	Document No: 23970505	Issue: 02	Volume: 1 (1)	Page: 27 (104)

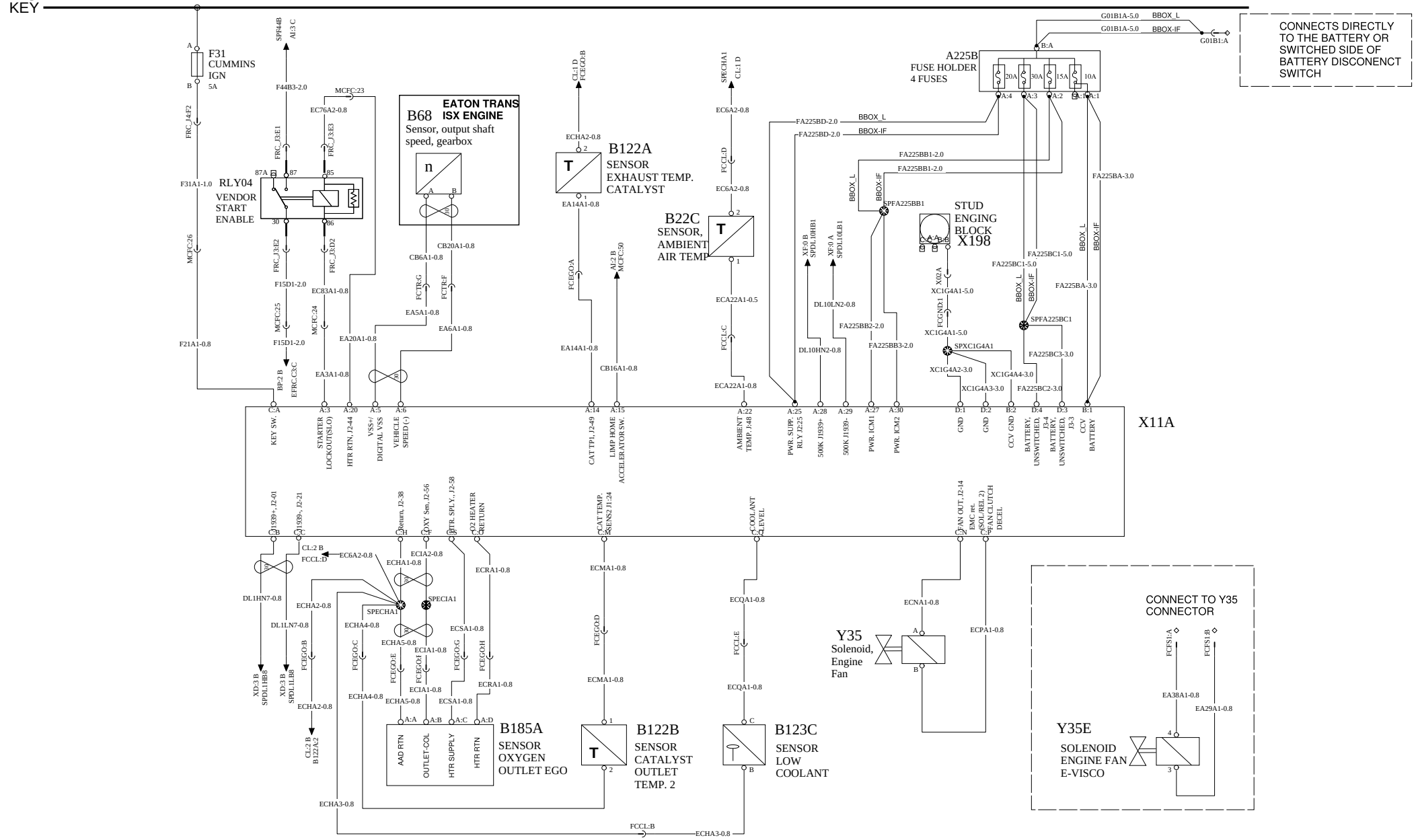

Volvo Truck Corporation	Document title: WIRING DIAGRAM, 12V MACK CONVENTIONAL Document type: PRODUCT SCHEMATIC	Document No: 23970505	Issue: 02	Volume: 1 (1)	Page: 28 (104)

METHANE DETECTION

WIRING DIAGRAM: CM

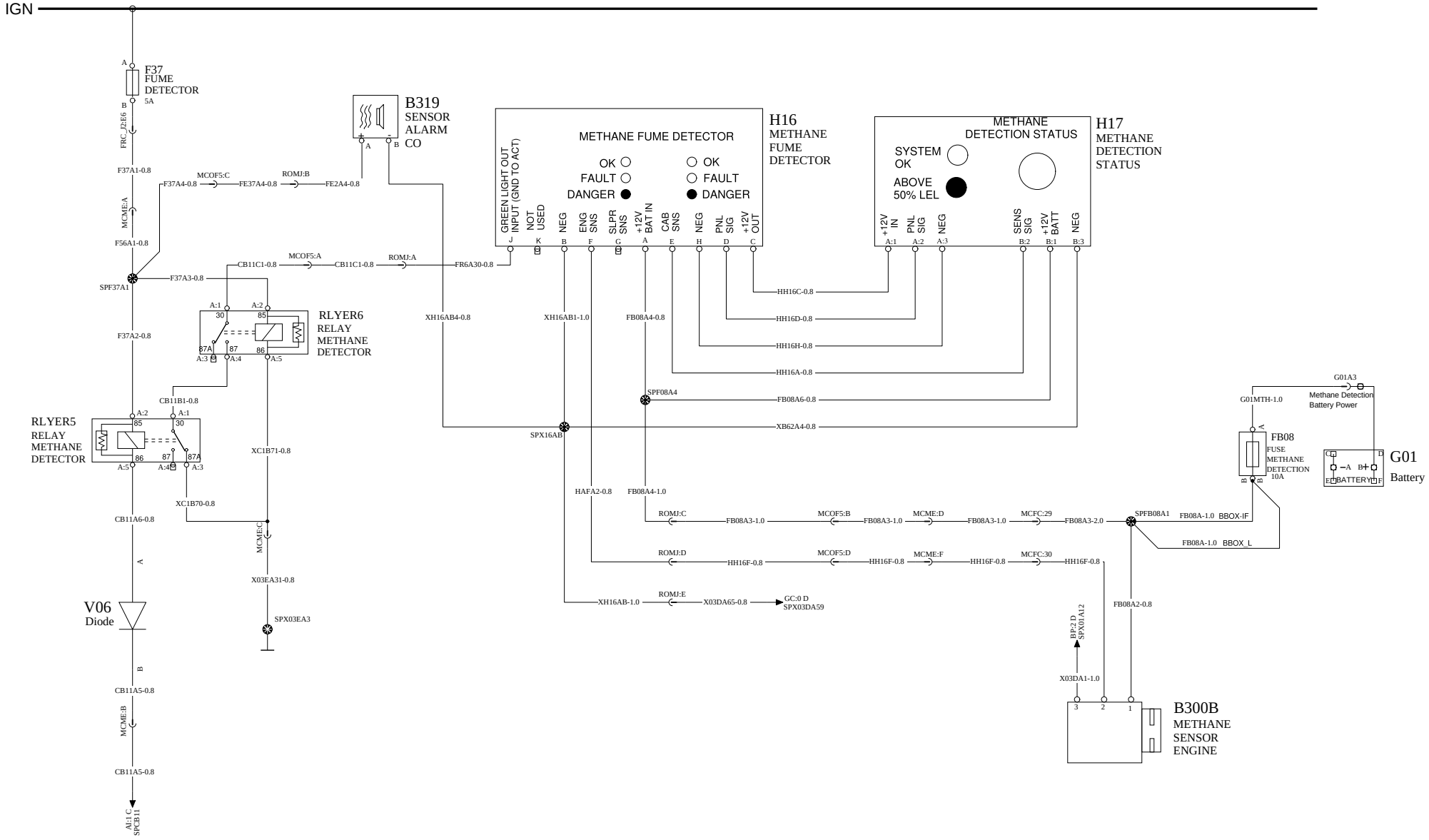

Volvo Truck Corporation	Document title WIRING DIAGRAM, 12V MACK CONVENTIONAL Document type PRODUCT SCHEMATIC	Document No 23970505	Issue 02	Volume 1 (1)	Page 29 (104)

UREA DOSING SYSTEM - MACK ENGINE OBD 2018

WIRING DIAGRAM: CN

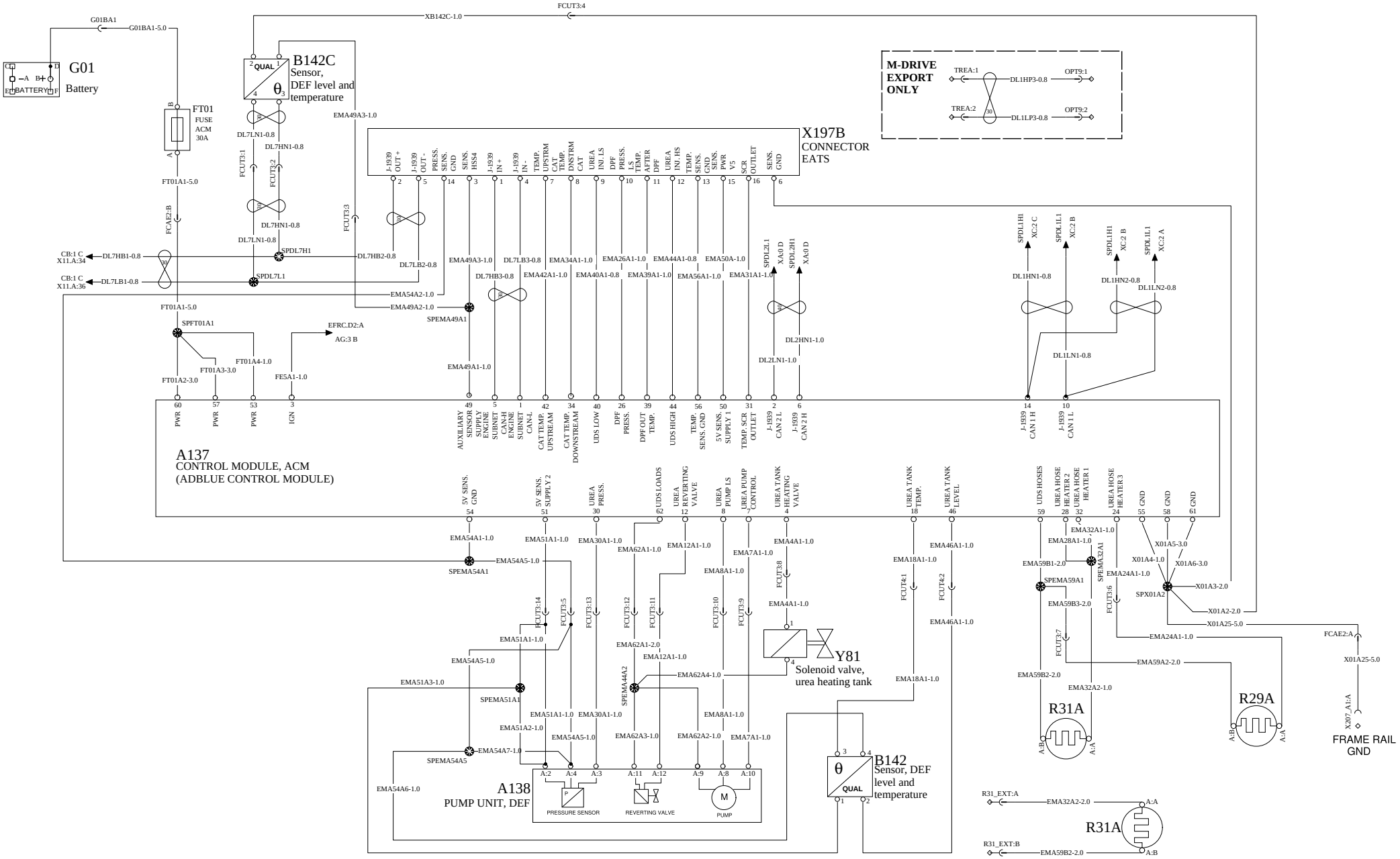

Document title	Document No	Issue	Volume	Page
WIRING DIAGRAM, 12V MACK CONVENTIONAL	23970505	02	1 (1)	30 (104)
Document type: PRODUCT SCHEMATIC				

Volvo Truck Corporation

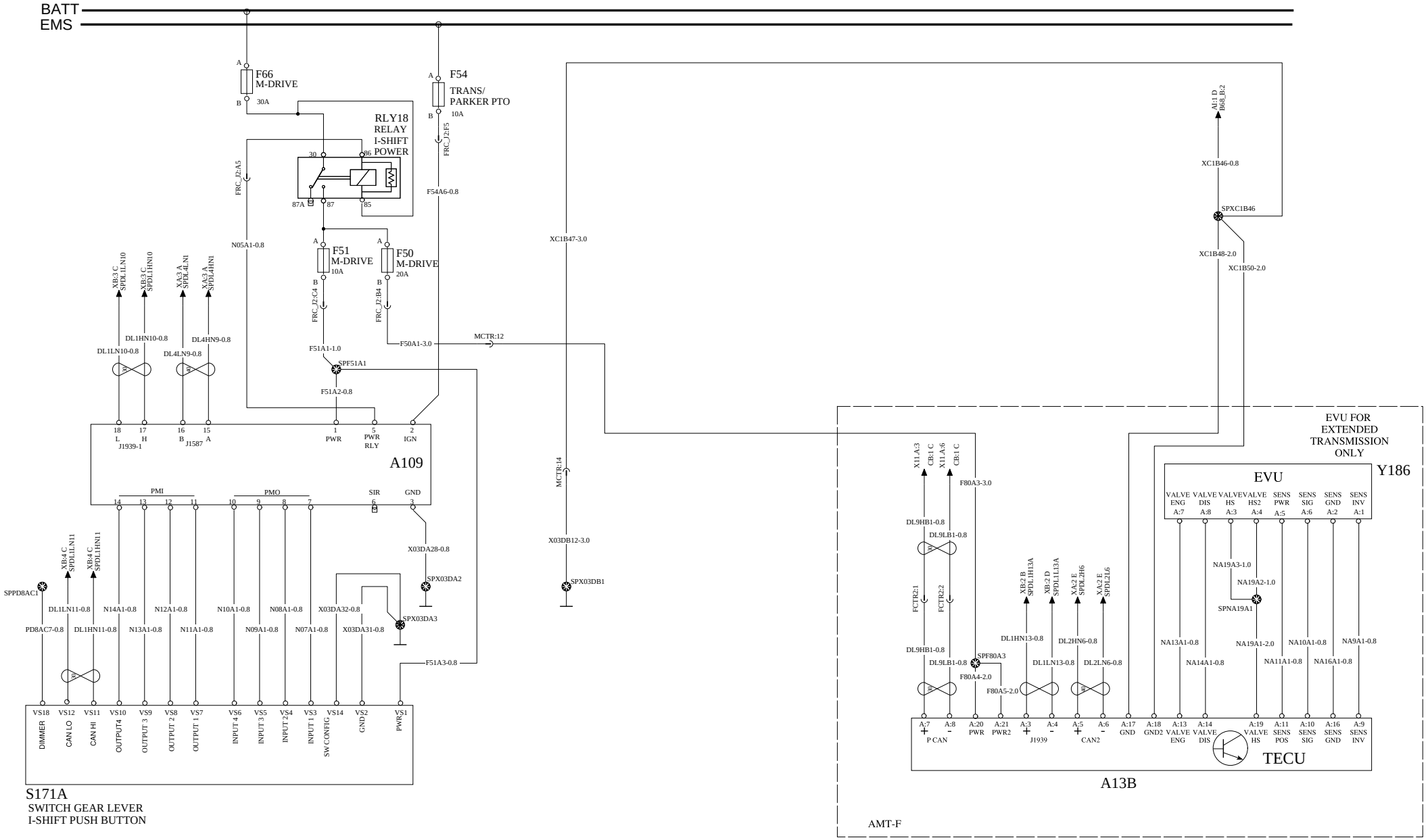

Volvo Truck Corporation	Document title: WIRING DIAGRAM, 12V MACK CONVENTIONAL Document type: PRODUCT SCHEMATIC	Document No: 23970505	Issue: 02	Volume: 1 (1)	Page: 31 (104)

TRANSMISSION CONTROL - ULTRASHIFT

WIRING DIAGRAM: DB

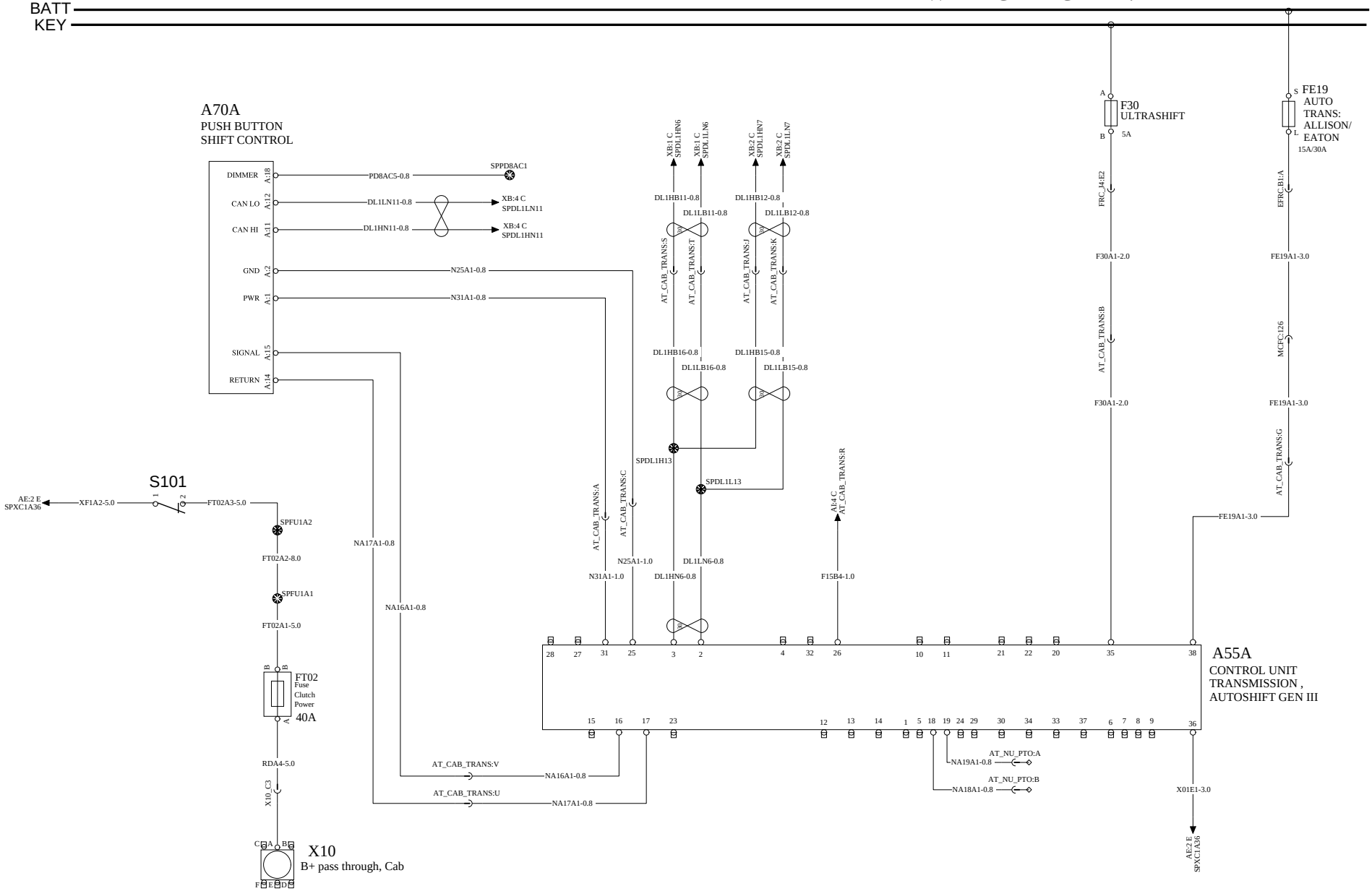

Volvo Truck Corporation	Document title WIRING DIAGRAM, 12V MACK CONVENTIONAL Document type PRODUCT SCHEMATIC	Document No 23970505	Issue 02	Volume 1 (1)	Page 32 (104)

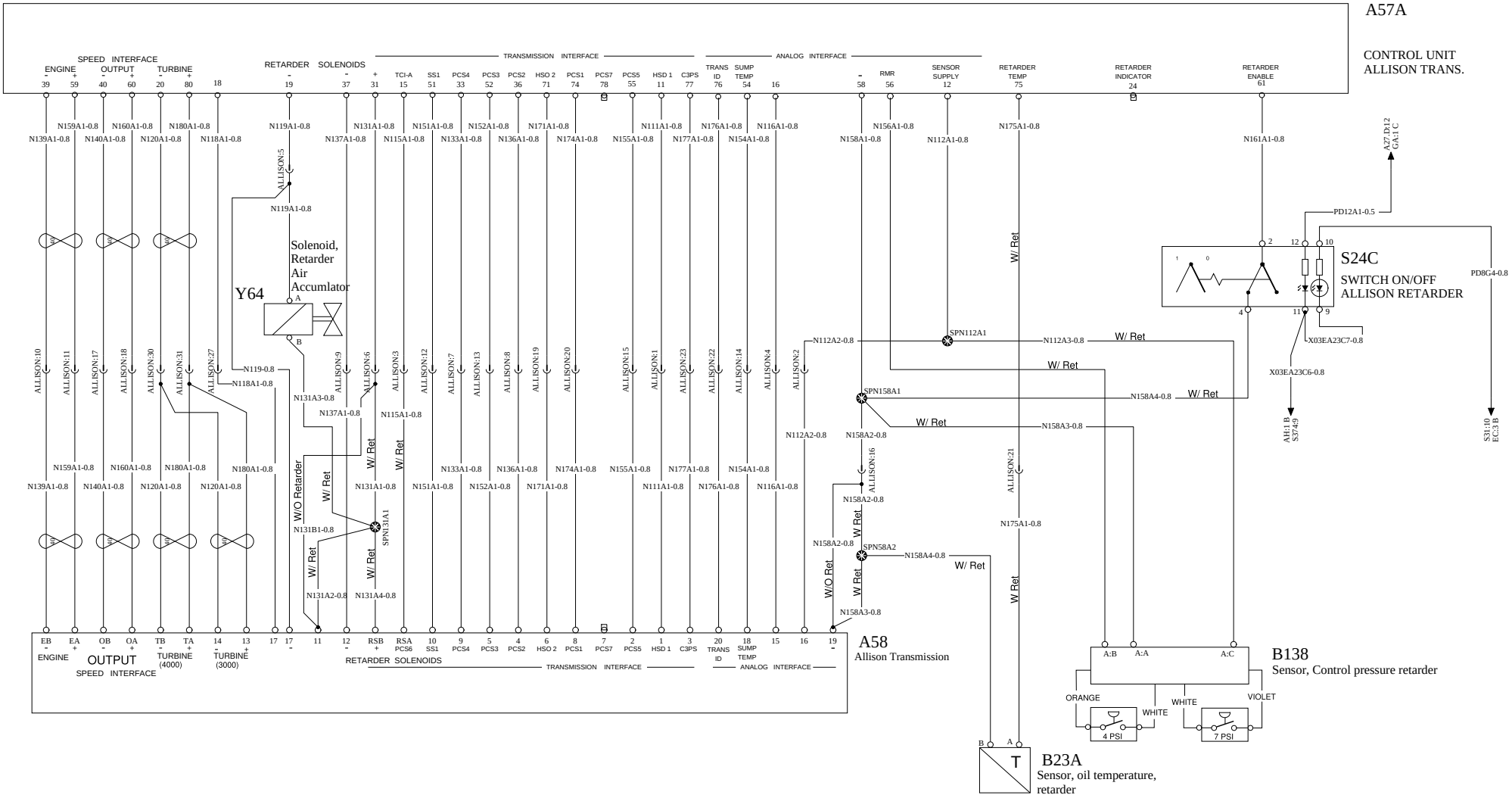

Volvo Truck Corporation	Document title WIRING DIAGRAM, 12V MACK CONVENTIONAL Document type PRODUCT SCHEMATIC	Document No 23970505	Issue 02	Volume 1 (1)	Page 33 (104)

ALLISON TRANSMISSION CONTROLS 2/2

WIRING DIAGRAM: DF

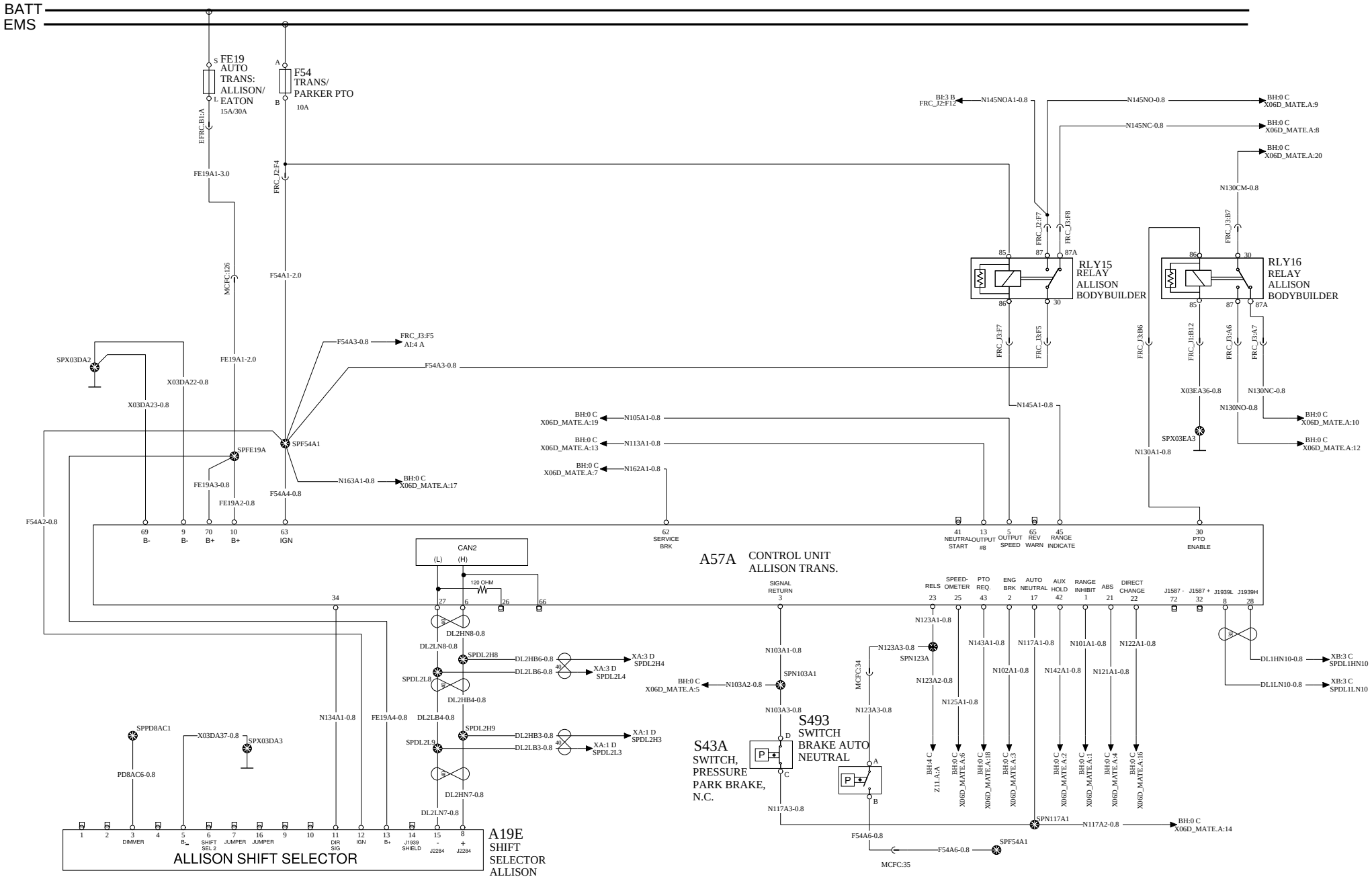

Volvo Truck Corporation	Document title: WIRING DIAGRAM, 12V MACK CONVENTIONAL Document type: PRODUCT SCHEMATIC	Document No: 23970505	Issue: 02	Volume: 1 (1)	Page: 34 (104)

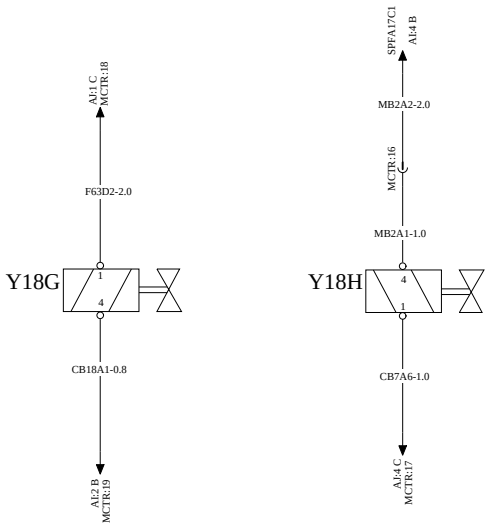
AI:1 C
MCTR:18
F63D2-2.0
Y18G
1
4
CB18A1-0.8
AI:2 B
MCTR:19
SPFA17C1
AI:4 B
MB2A2-2.0
MCTR:16
MB2A1-1.0
Y18H
4
1
CB7A6-1.0
AI:4 C
MCTR:17

ABS CONTROL WABCO

WIRING DIAGRAM: EA

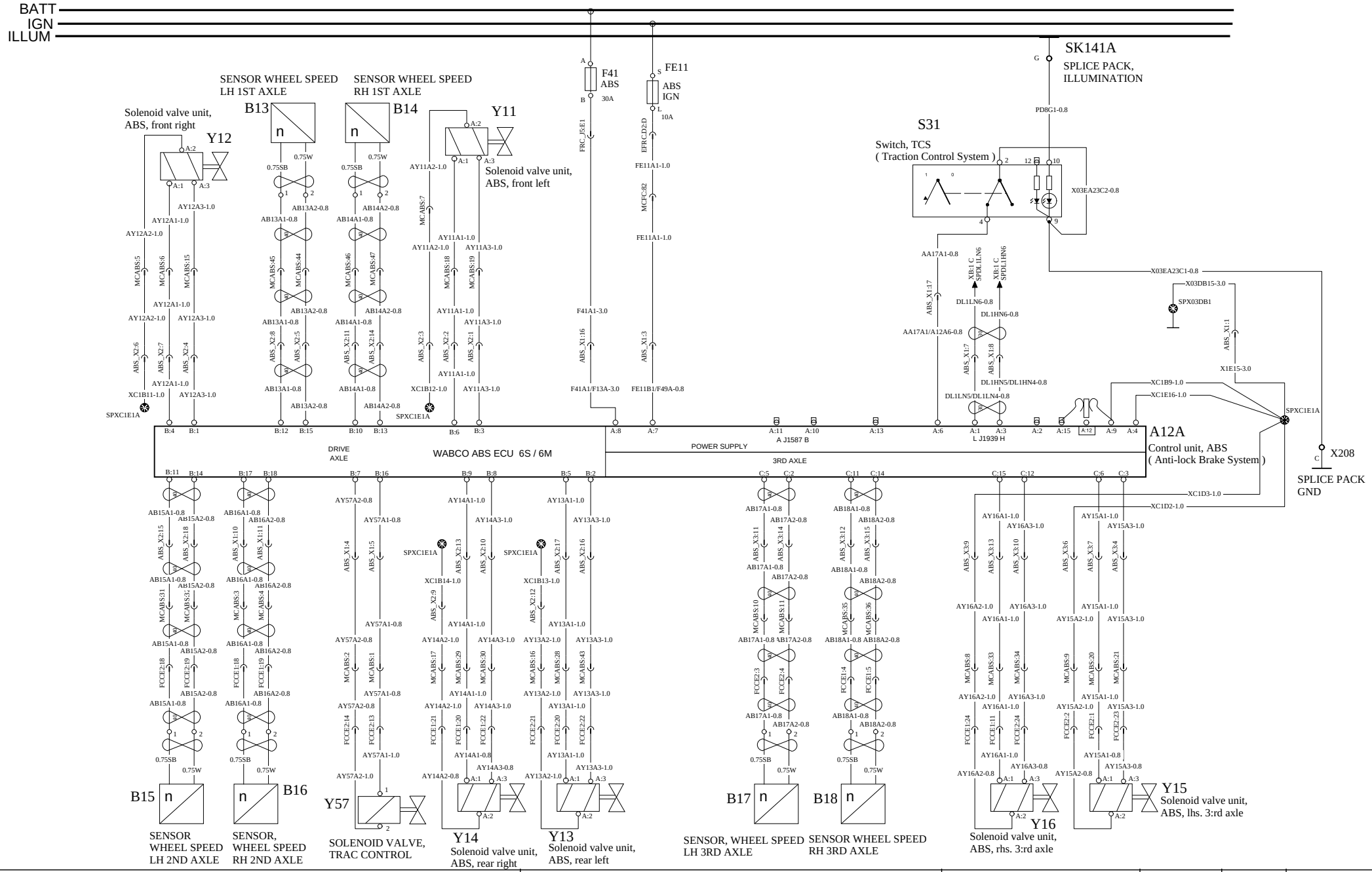

Volvo Truck Corporation	Document title WIRING DIAGRAM, 12V MACK CONVENTIONAL Document type PRODUCT SCHEMATIC	Document No 23970505	Issue 02	Volume 1 (1)	Page 36 (104)

SUSPENSION ECU 6X2

WIRING DIAGRAM: EB

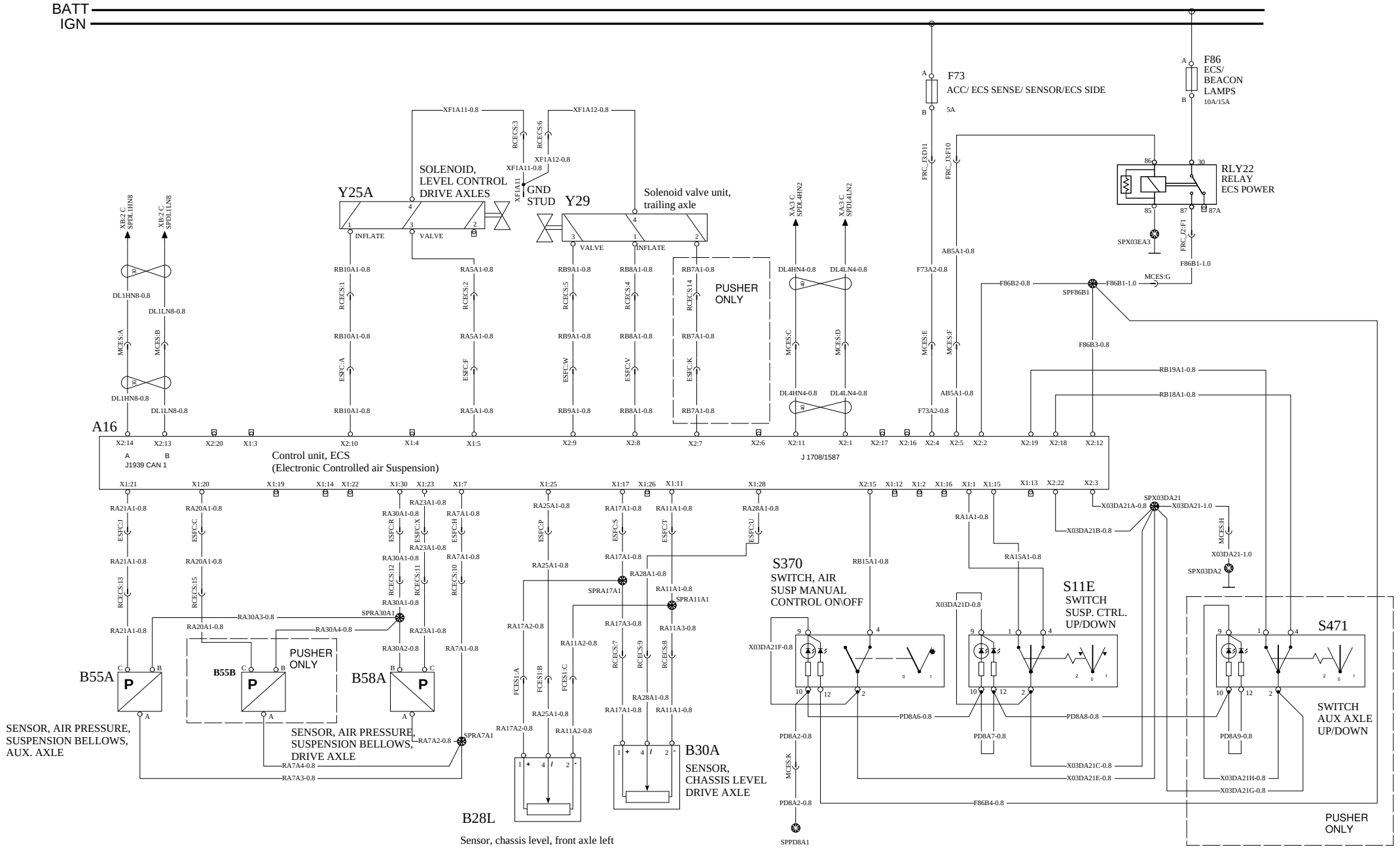

Volvo Truck Corporation	Document title: WIRING DIAGRAM, 12V MACK CONVENTIONAL Document type: PRODUCT SCHEMATIC	Document No: 23970505	Issue: 02	Volume: 1 (1)	Page: 37 (104)

ABS CONTROL BENDIX

WIRING DIAGRAM: EC

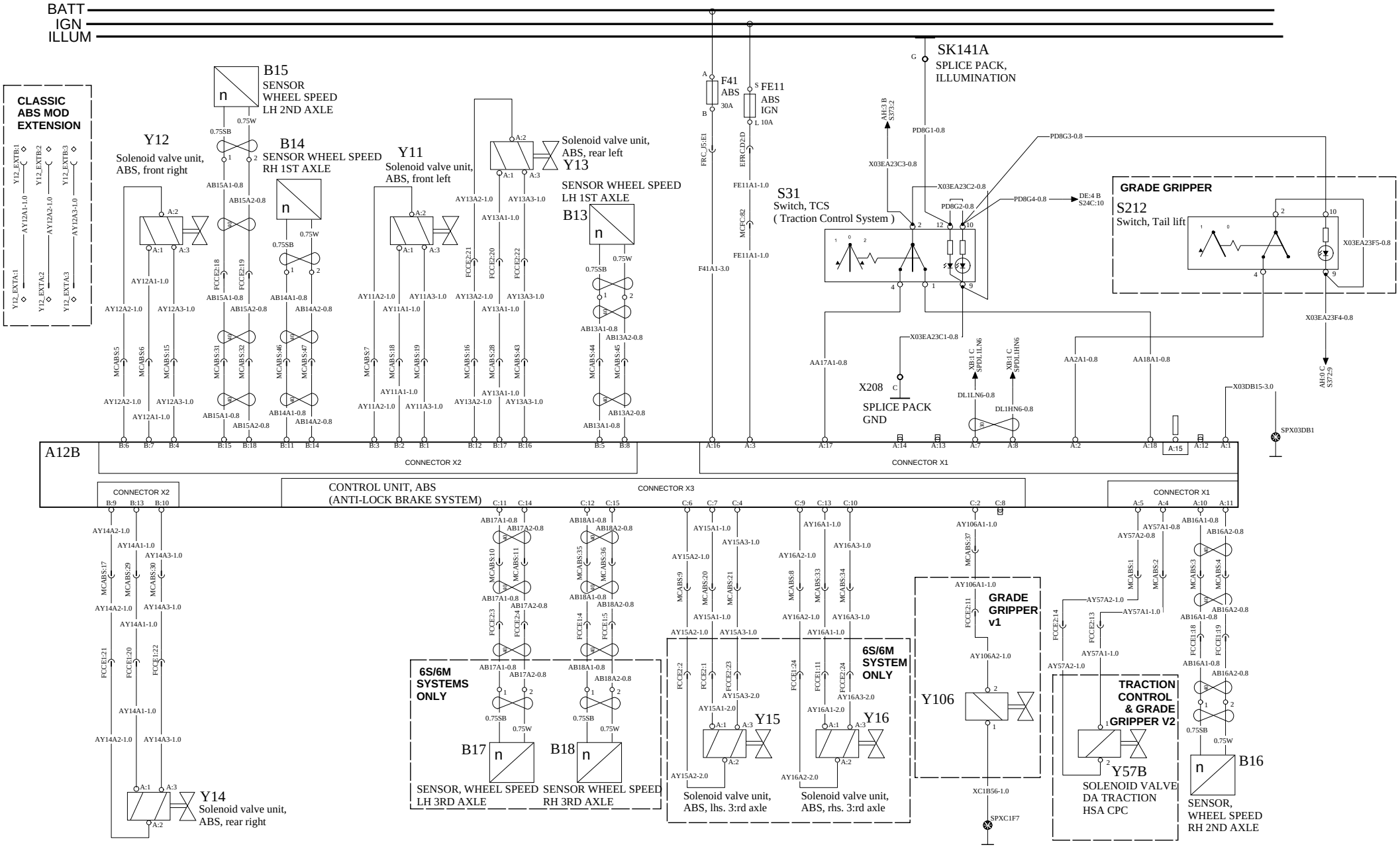

Document title	Document No	Issue	Volume	Page
WIRING DIAGRAM, 12V MACK CONVENTIONAL	23970505	02	1 (1)	38 (104)
Document type: PRODUCT SCHEMATIC				

Volvo Truck Corporation

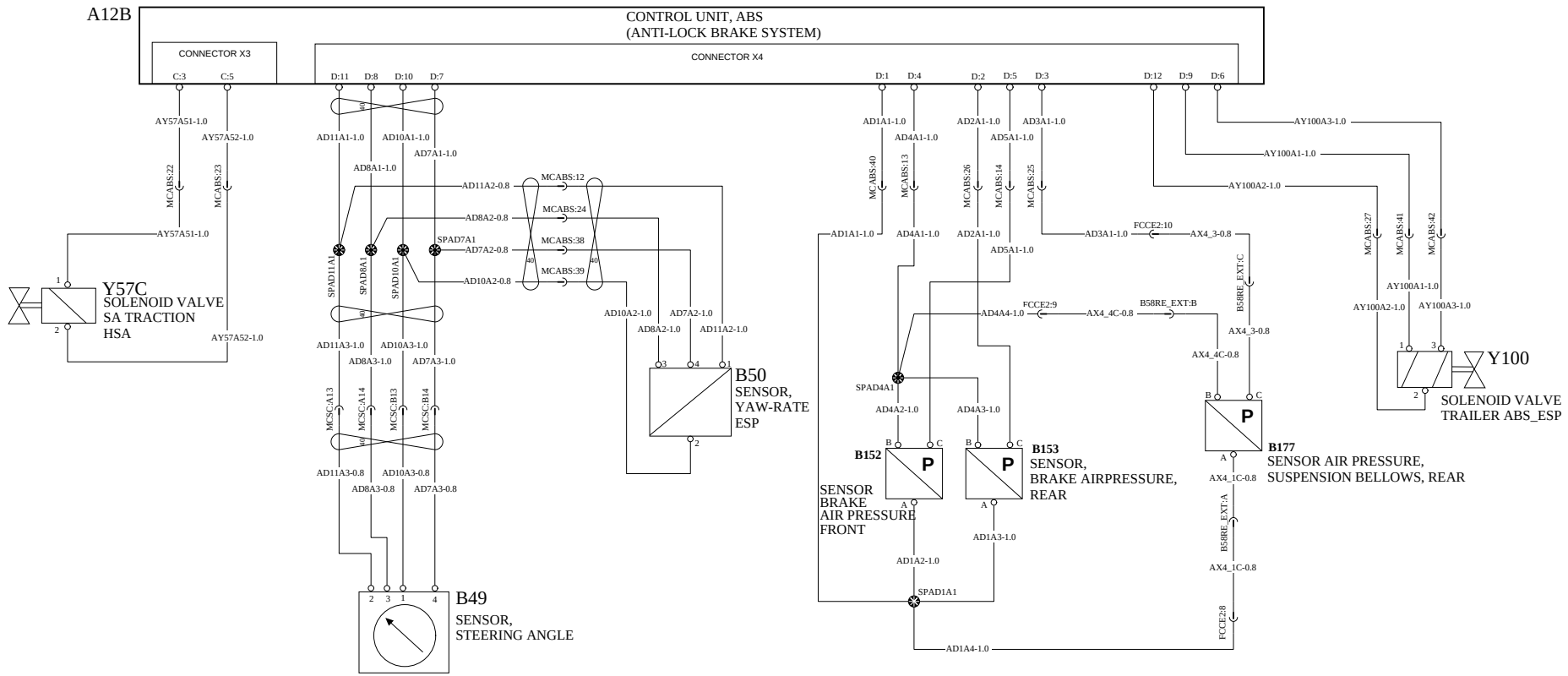

Volvo Truck Corporation	Document title WIRING DIAGRAM, 12V MACK CONVENTIONAL Document type PRODUCT SCHEMATIC	Document No 23970505	Issue 02	Volume 1 (1)	Page 39 (104)

AIR DRYER/HEATED DRAIN VALVE

WIRING DIAGRAM: FA

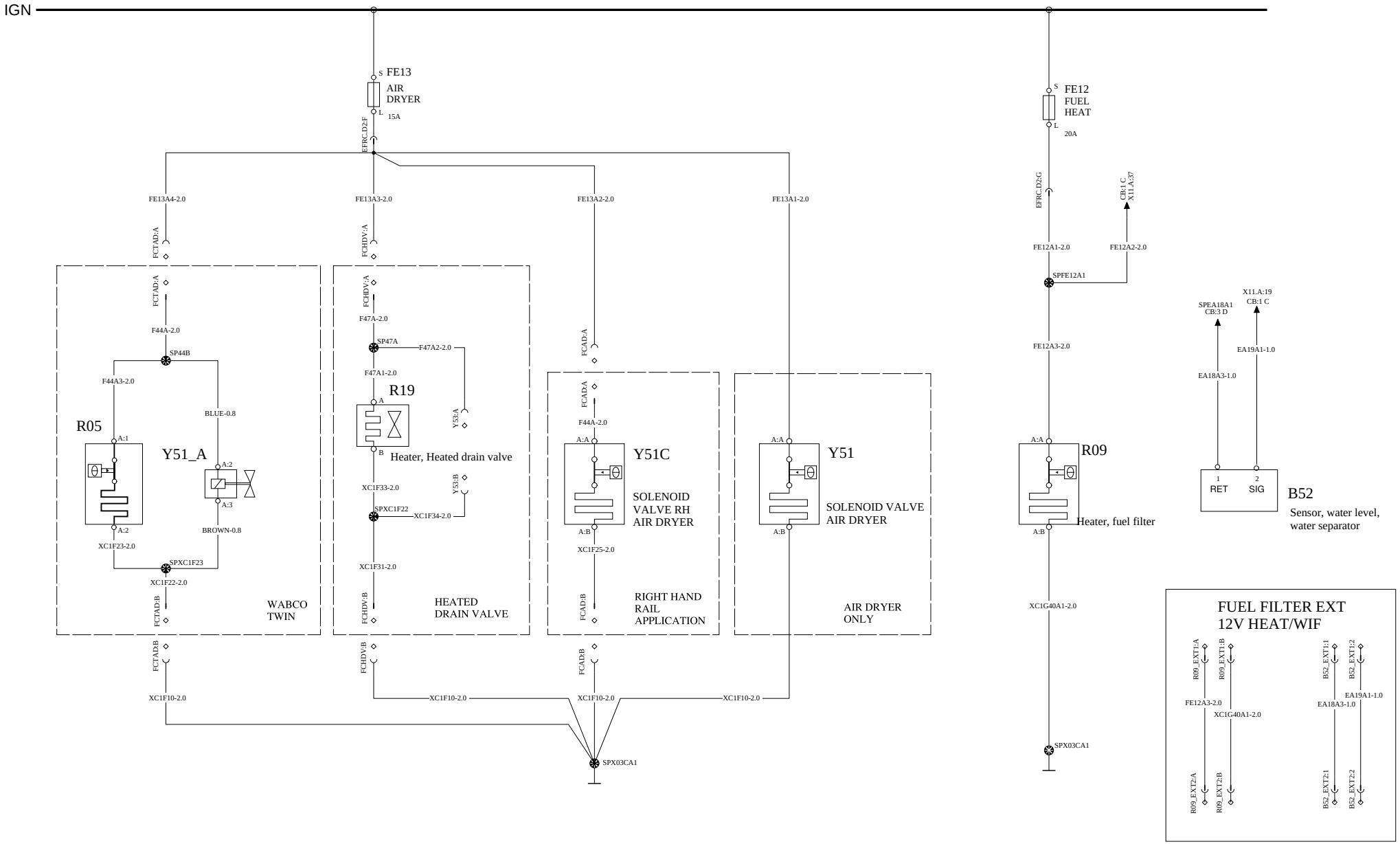

Volvo Truck Corporation	Document title: WIRING DIAGRAM, 12V MACK CONVENTIONAL Document type: PRODUCT SCHEMATIC	Document No: 23970505	Issue: 02	Volume: 1 (1)	Page: 40 (104)

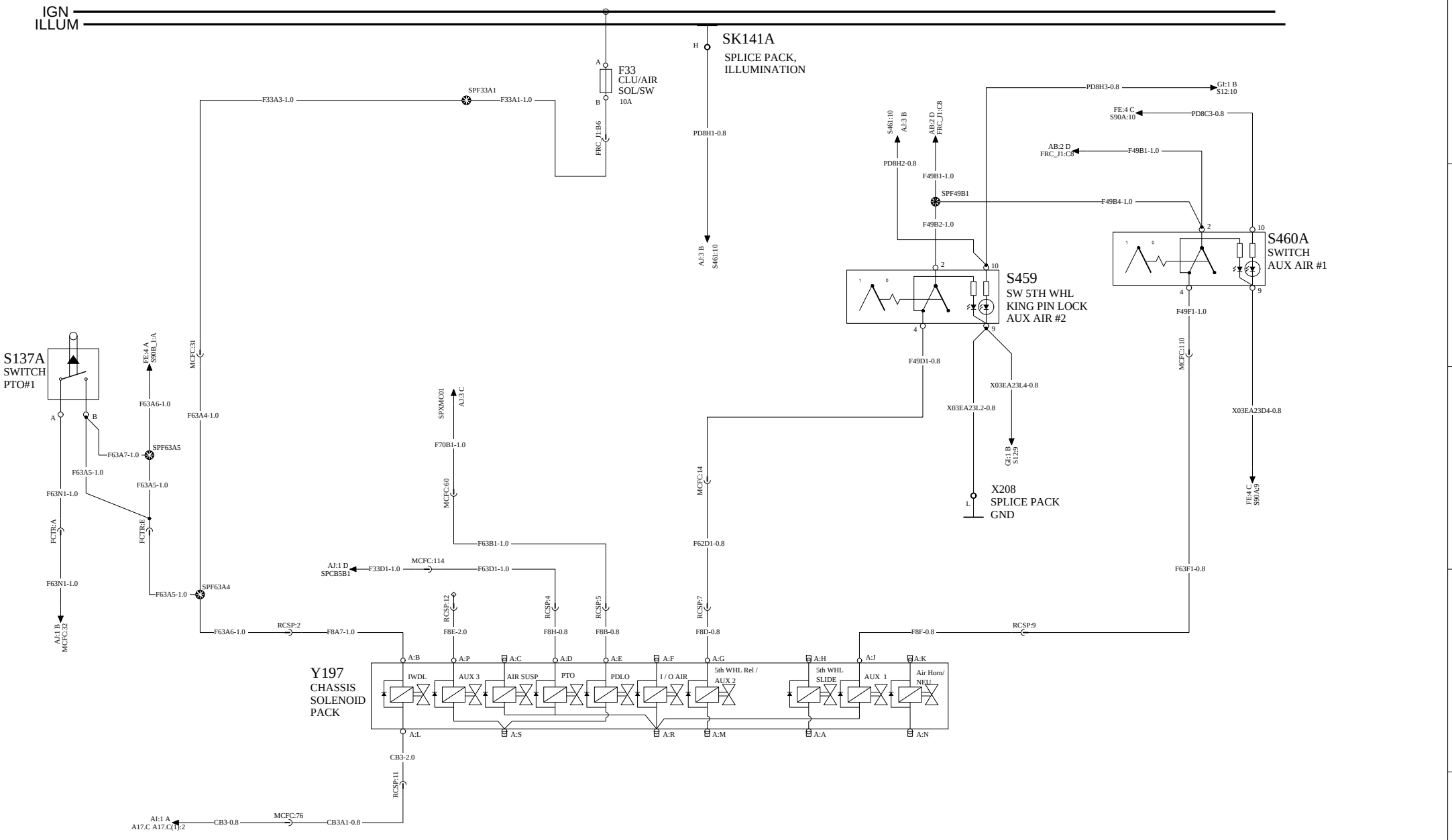

Volvo Truck Corporation	Document title WIRING DIAGRAM, 12V MACK CONVENTIONAL Document type PRODUCT SCHEMATIC	Document No 23970505	Issue 02	Volume 1 (1)	Page 41 (104)

CHASSIS SOLENOIDS 2/2

WIRING DIAGRAM: FE

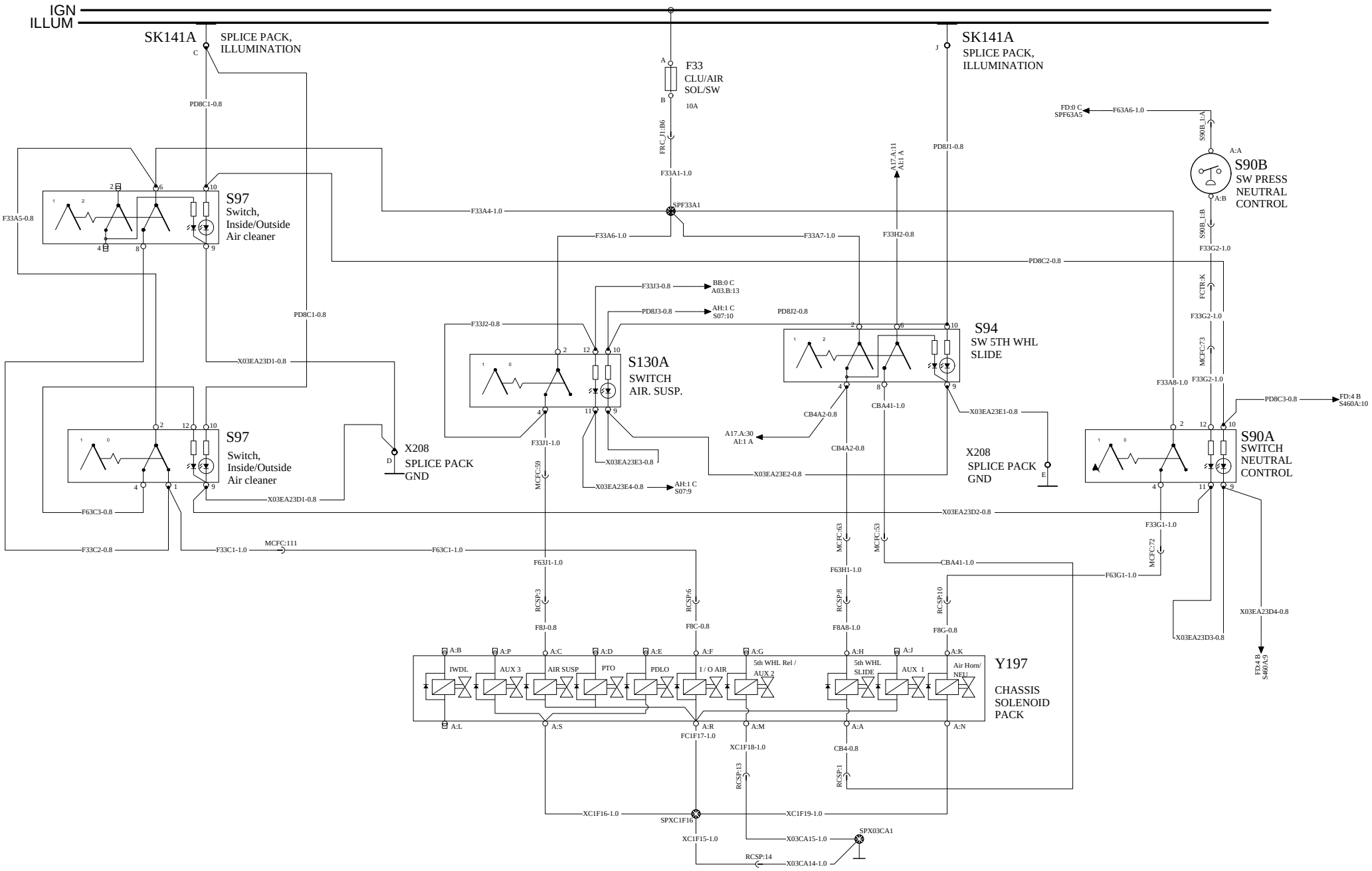

Volvo Truck Corporation	Document title: WIRING DIAGRAM, 12V MACK CONVENTIONAL Document type: PRODUCT SCHEMATIC	Document No: 23970505	Issue: 02	Volume: 1 (1)	Page: 42 (104)

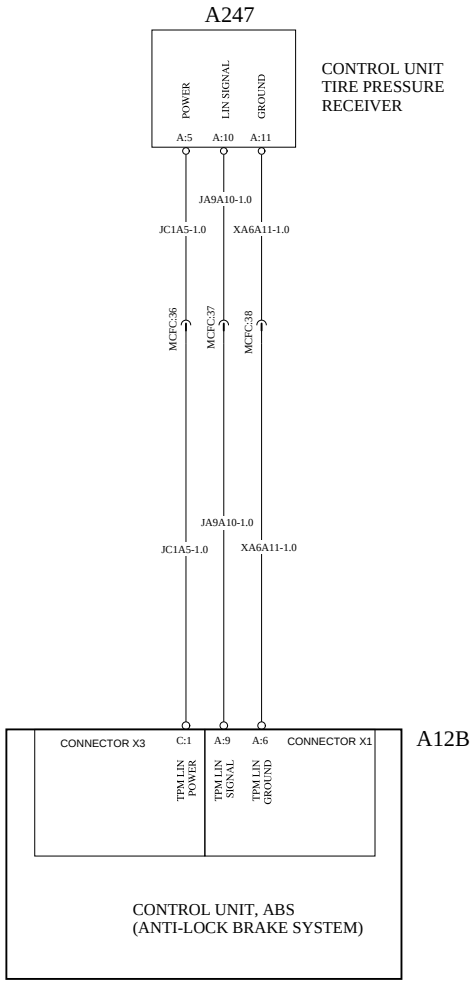
A247
POWER
LIN SIGNAL
GROUND
A:5
A:10
A:11
CONTROL UNIT
TIRE PRESSURE
RECEIVER
JA9A10-1.0
JC1A5-1.0
XA6A11-1.0
MCFC:36
MCFC:37
MCFC:38
JA9A10-1.0
JC1A5-1.0
XA6A11-1.0
CONNECTOR X3
C:1
A:9
A:6
CONNECTOR X1
TPM LIN POWER
TPM LIN SIGNAL
TPM LIN GROUND
A12B
CONTROL UNIT, ABS
(ANTI-LOCK BRAKE SYSTEM)

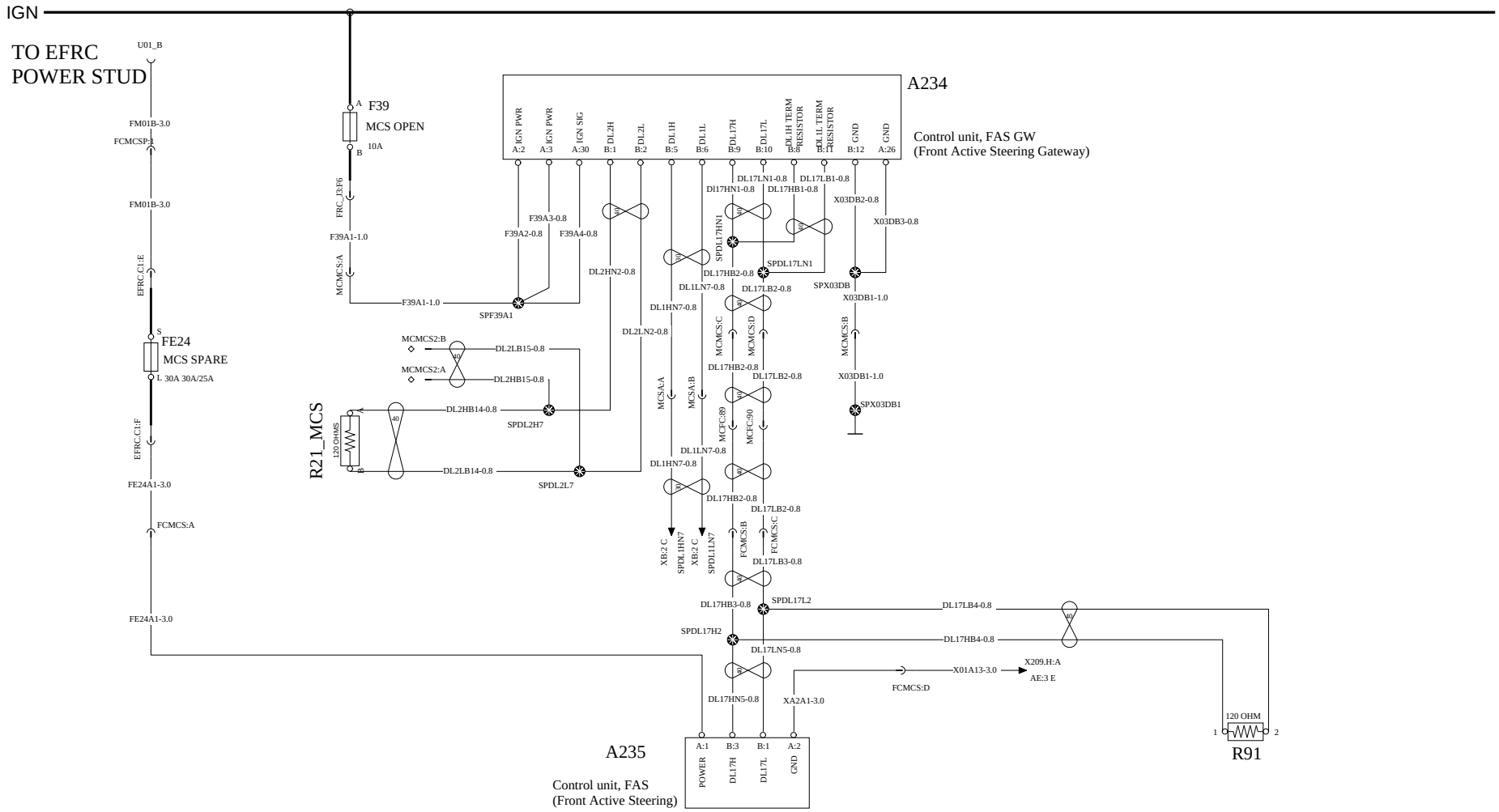

Volvo Truck Corporation	Document title WIRING DIAGRAM, 12V MACK CONVENTIONAL Document type PRODUCT SCHEMATIC	Document No 23970505	Issue 02	Volume 1 (1)	Page 44 (104)

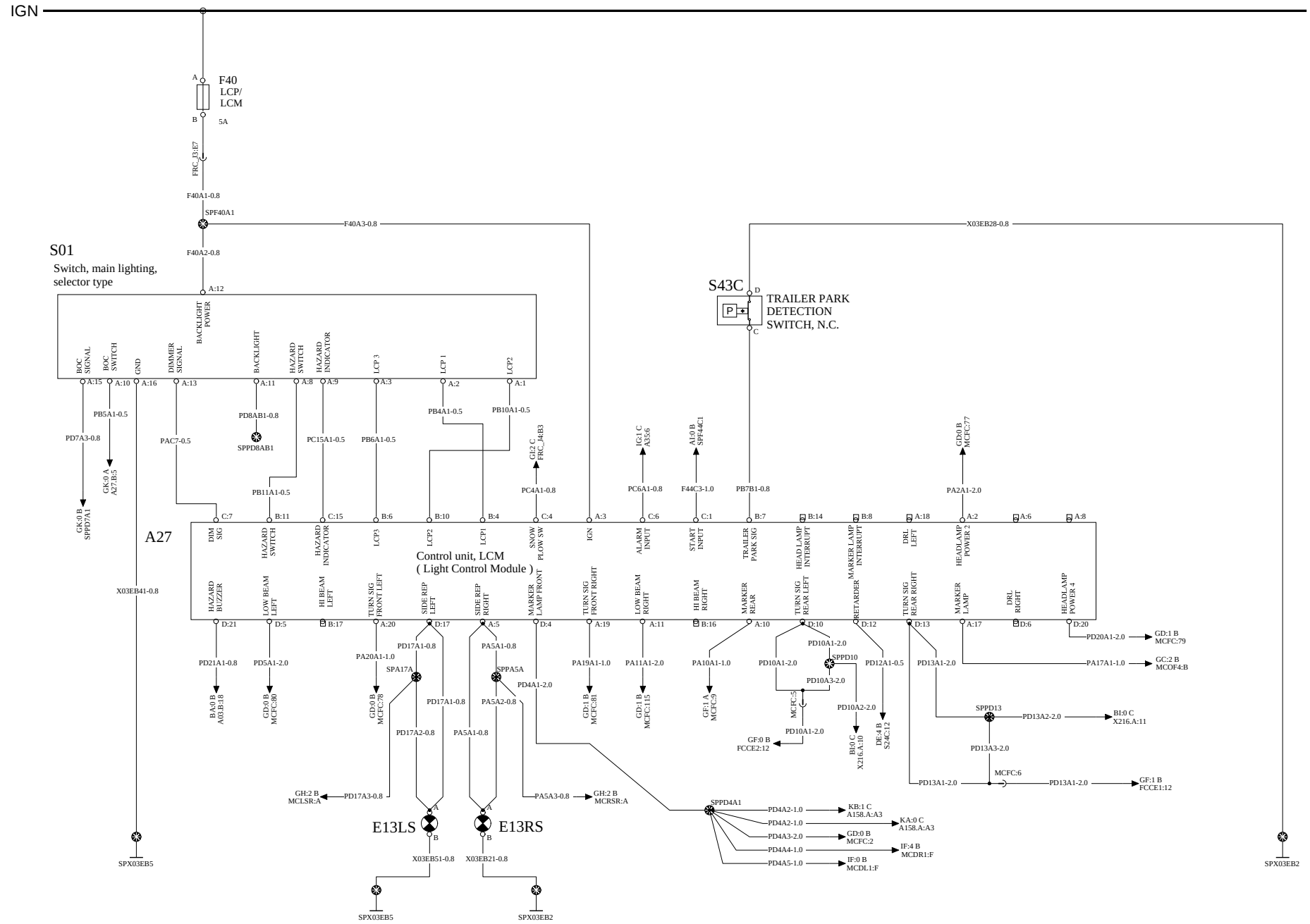

Volvo Truck Corporation	Document title WIRING DIAGRAM, 12V MACK CONVENTIONAL Document type PRODUCT SCHEMATIC	Document No 23970505	Issue 02	Volume 1 (1)	Page 45 (104)

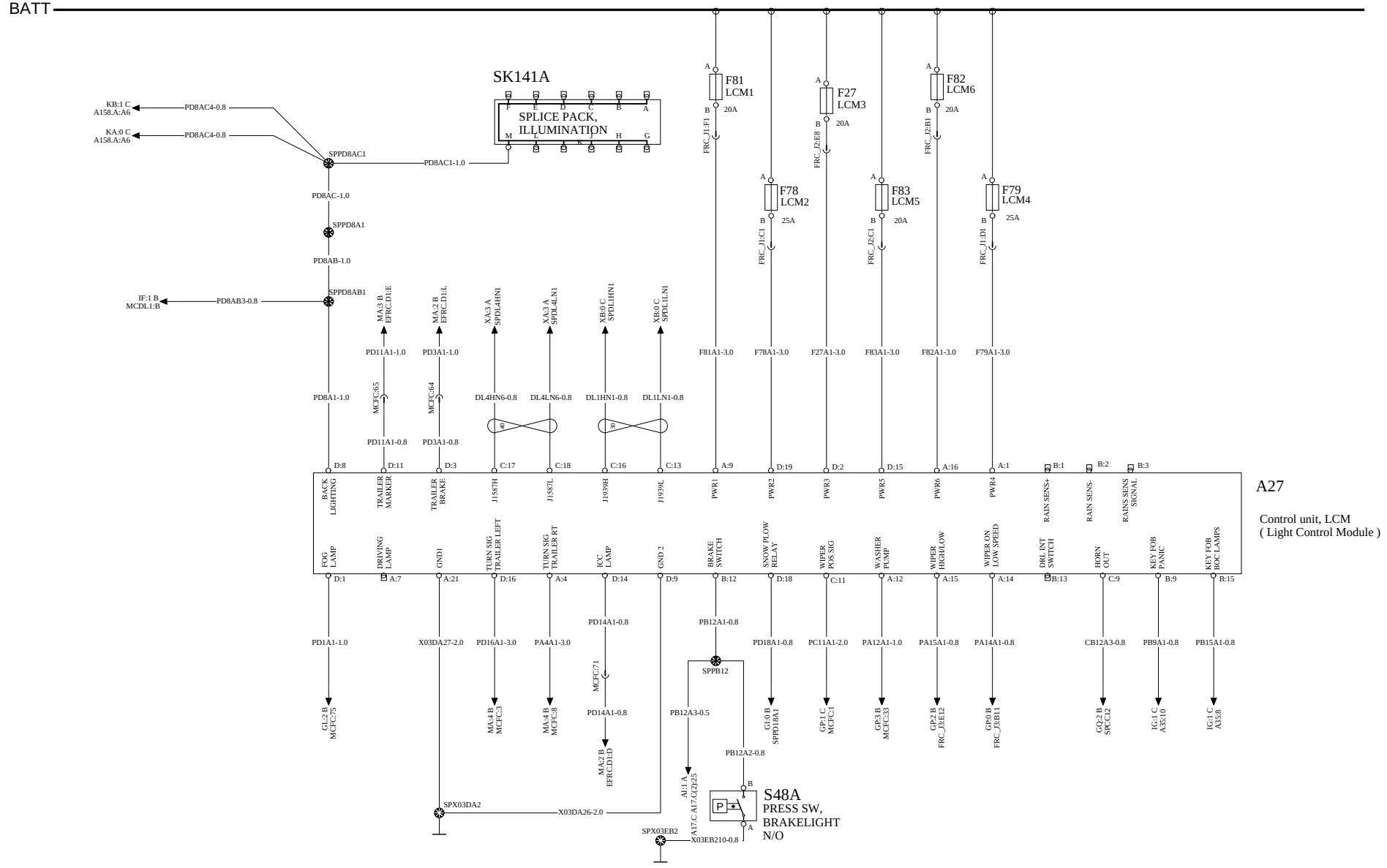

	Document title	Document No	Issue	Volume	Page
Volvo Truck Corporation	WIRING DIAGRAM, 12V MACK CONVENTIONAL	23970505	02	1 (1)	46 (104)
	Document type: PRODUCT SCHEMATIC				

CLEARANCE LAMPS

WIRING DIAGRAM: GC

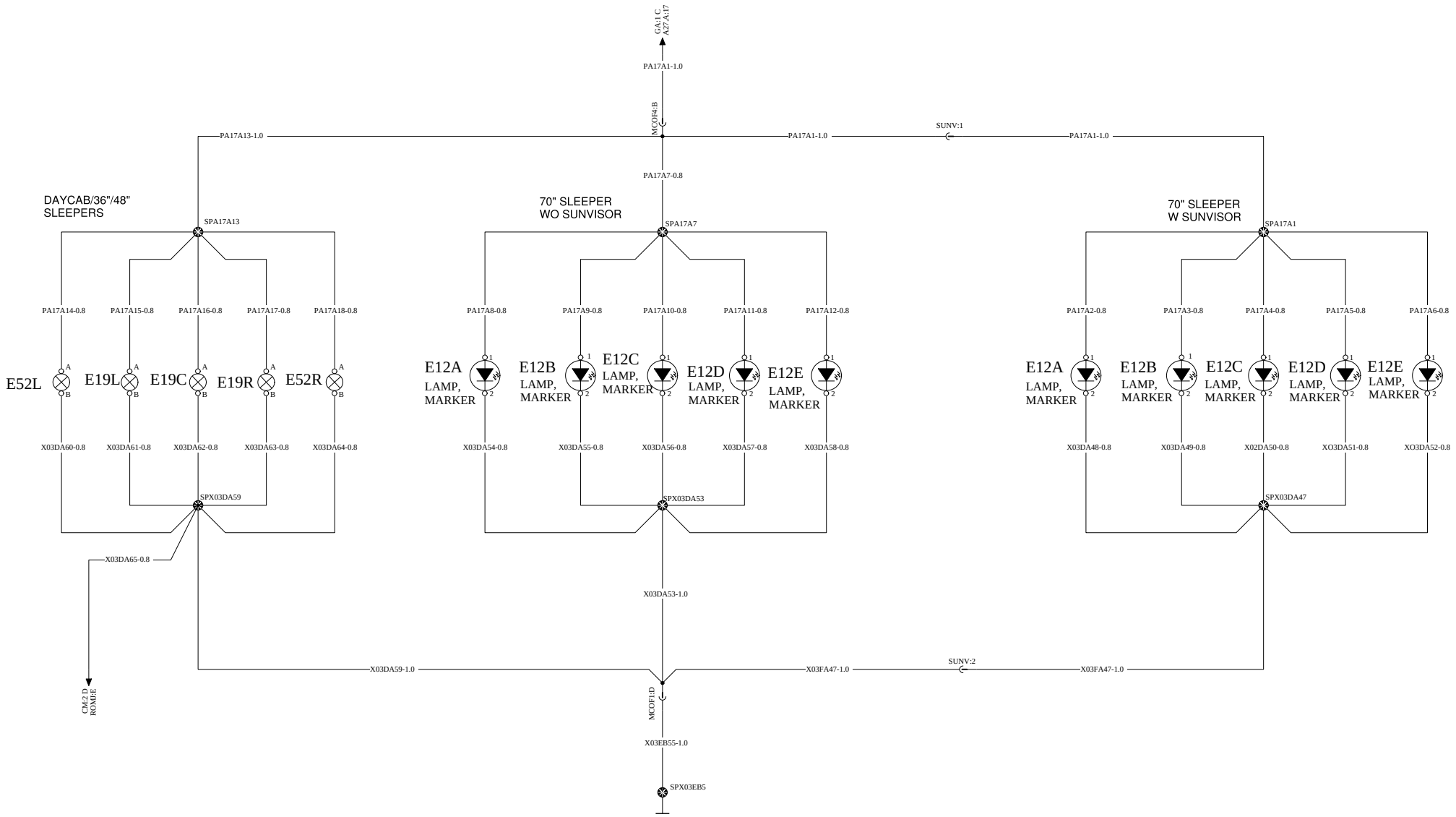

Volvo Truck Corporation	Document title WIRING DIAGRAM, 12V MACK CONVENTIONAL Document type PRODUCT SCHEMATIC	Document No 23970505	Issue 02	Volume 1 (1)	Page 47 (104)

DRIVING/SIGNAL LIGHTS: AERO OR CONSTRUC

WIRING DIAGRAM: GD

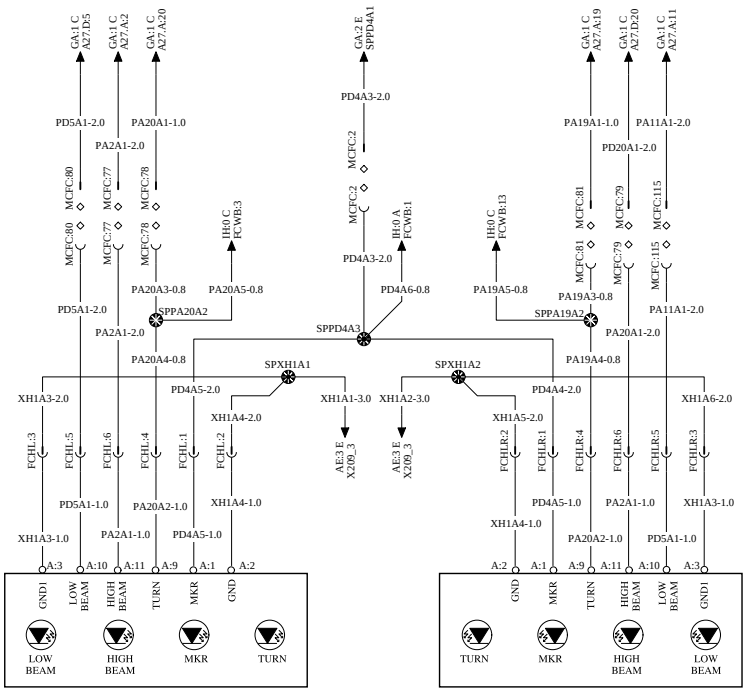

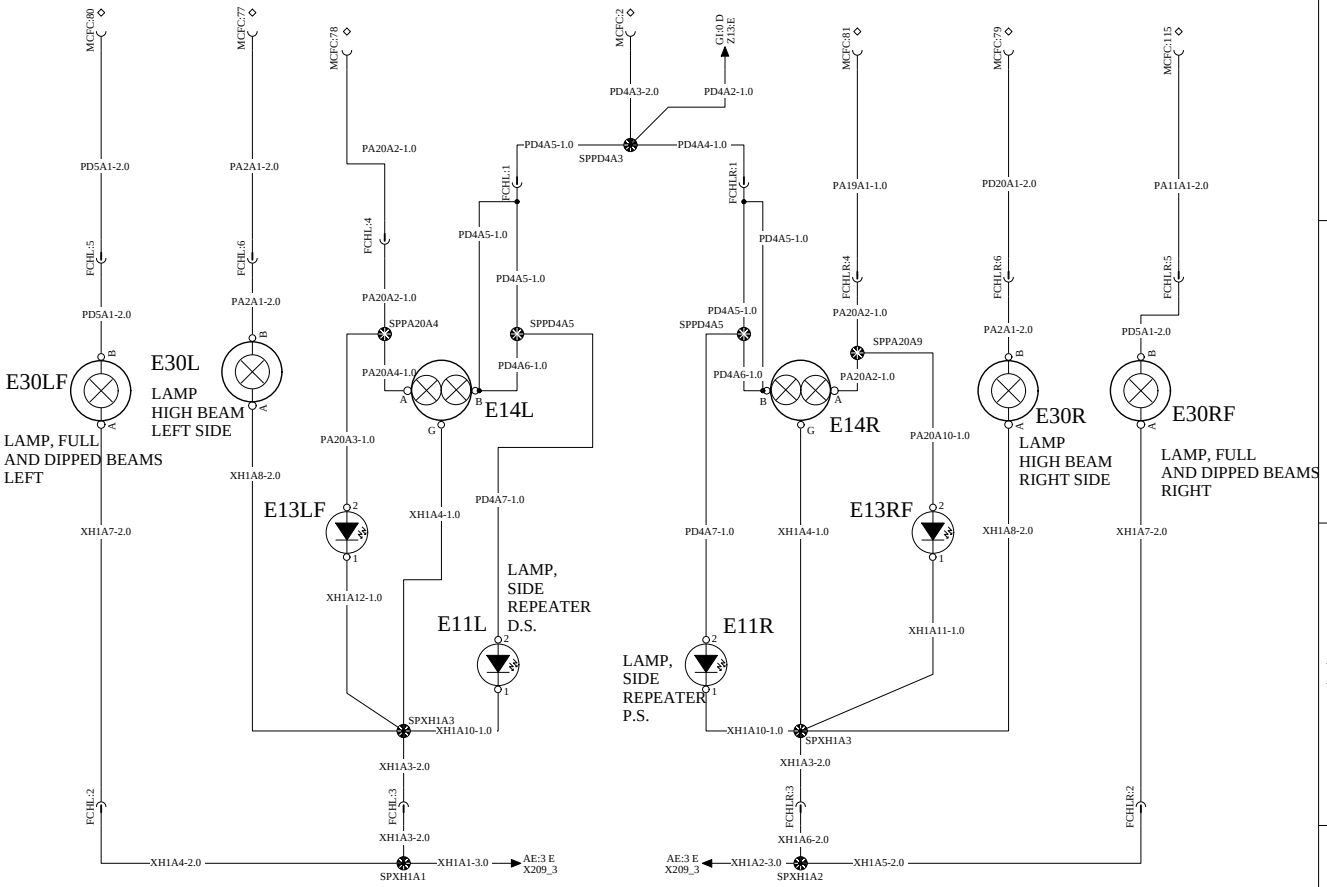

Volvo Truck Corporation	Document title: WIRING DIAGRAM, 12V MACK CONVENTIONAL Document type: PRODUCT SCHEMATIC	Document No: 23970505	Issue: 02	Volume: 1 (1)	Page: 48 (104)

LIGHTING FORWARD SIGNAL: CLASSIC

WIRING DIAGRAM: GE

SEE SHEET GD FOR
CONNECTIONS TO
FRONT CHASSIS

LED

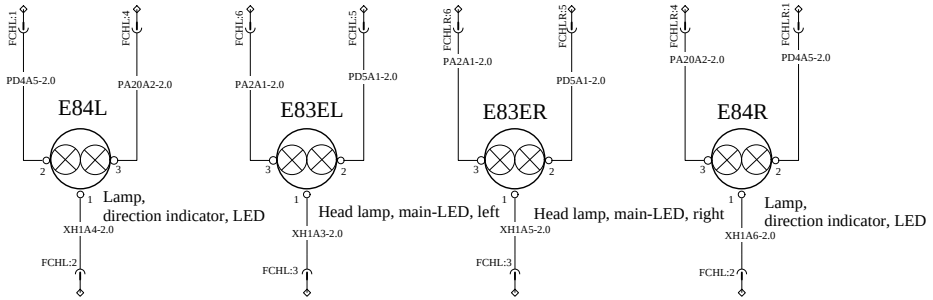

HALOGEN

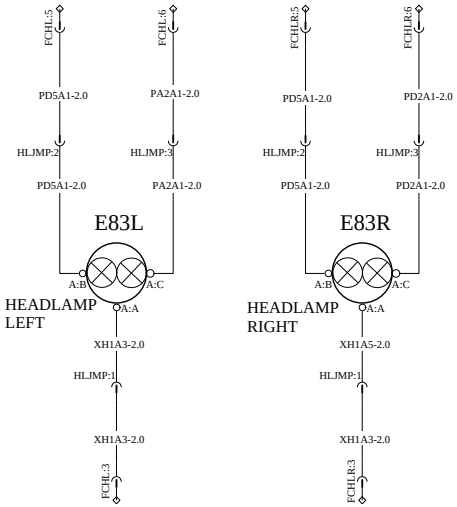

Volvo Truck Corporation	Document title WIRING DIAGRAM, 12V MACK CONVENTIONAL Document type PRODUCT SCHEMATIC	Document No 23970505	Issue 02	Volume 1 (1)	Page 49 (104)

TAIL LAMPS W/ ALARM

WIRING DIAGRAM: GF

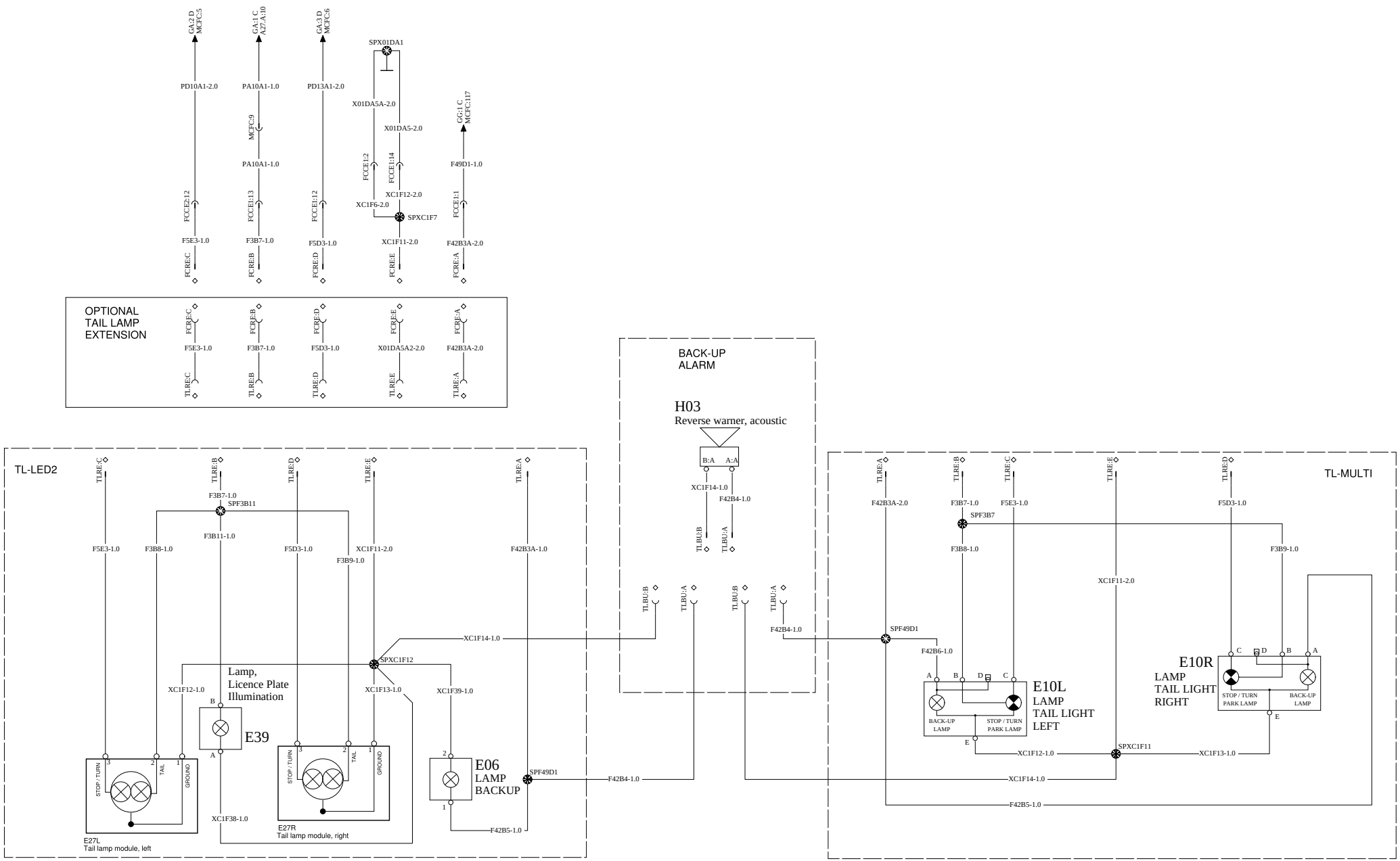

Volvo Truck Corporation	Document title WIRING DIAGRAM, 12V MACK CONVENTIONAL Document type PRODUCT SCHEMATIC	Document No 23970505	Issue 02	Volume 1 (1)	Page 50 (104)

LIGHT CONTROL - BACK UP LAMPS

WIRING DIAGRAM: GG

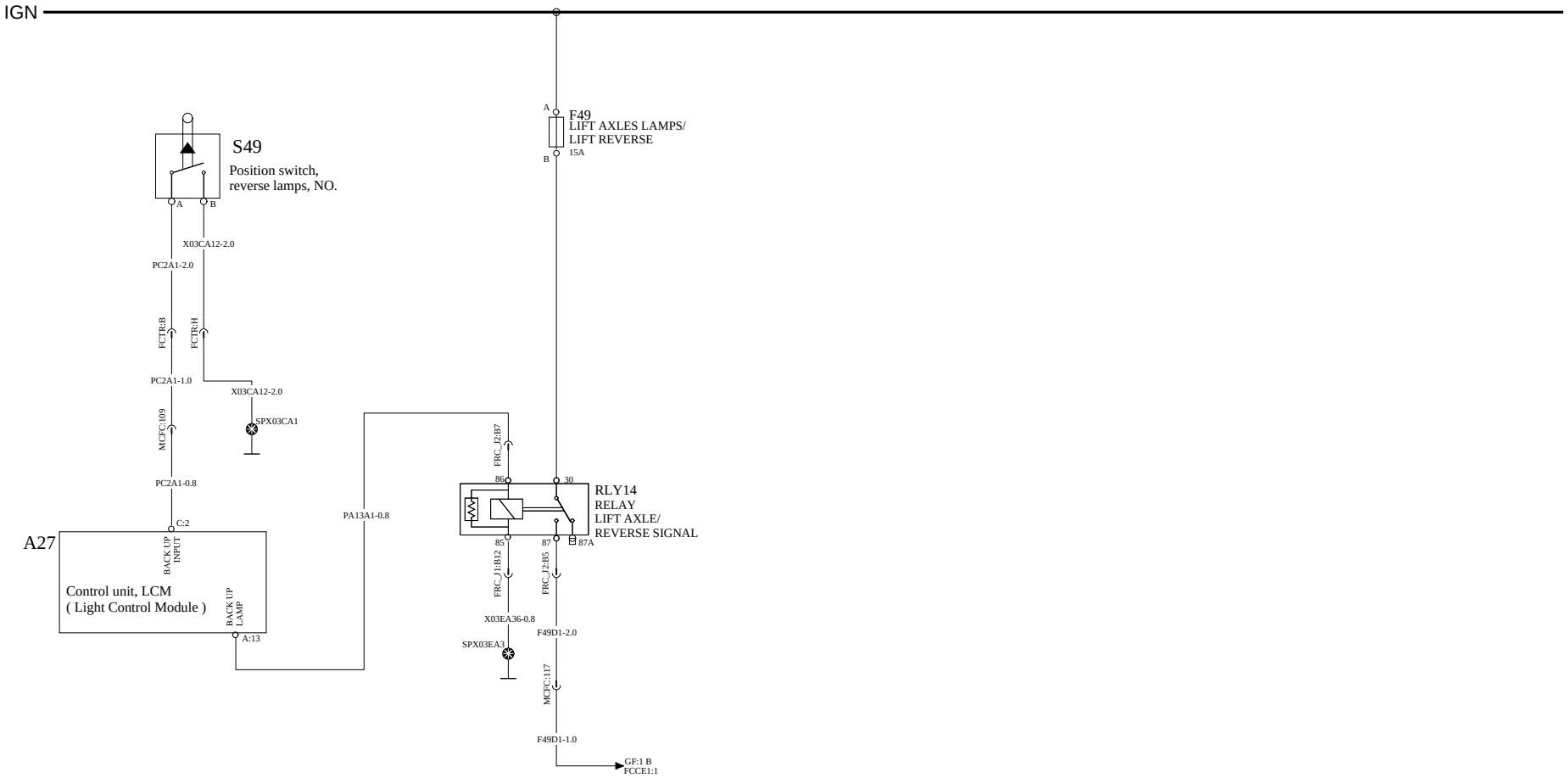

Volvo Truck Corporation	Document title WIRING DIAGRAM, 12V MACK CONVENTIONAL Document type PRODUCT SCHEMATIC	Document No 23970505	Issue 02	Volume 1 (1)	Page 51 (104)

SIDE REPEATER/MARKER OPTIONS

WIRING DIAGRAM: GH

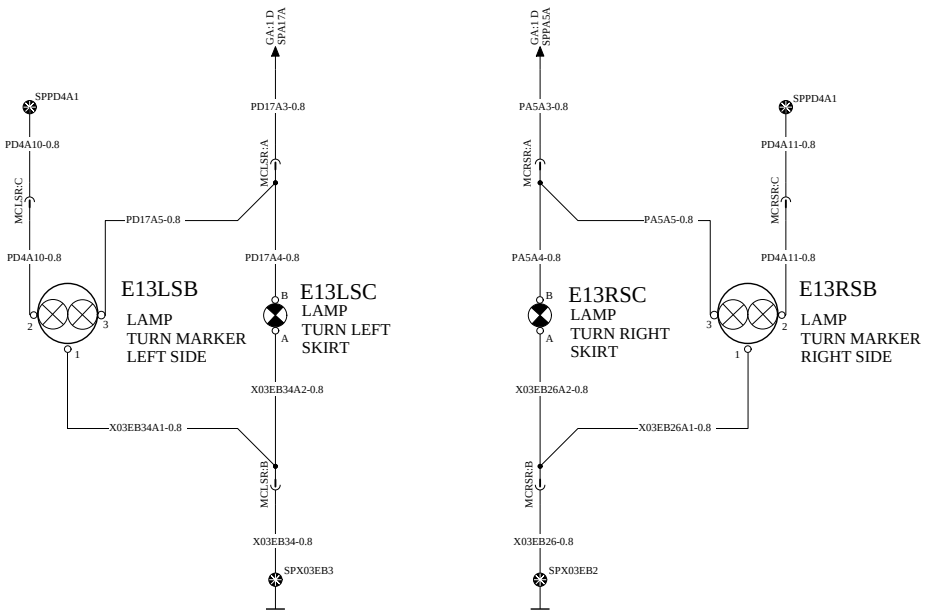

	Document title	Document No	Issue	Volume	Page
Volvo Truck Corporation	WIRING DIAGRAM, 12V MACK CONVENTIONAL	23970505	02	1 (1)	52 (104)
	Document type: PRODUCT SCHEMATIC				

SNOW PLOW PREP

WIRING DIAGRAM: GI

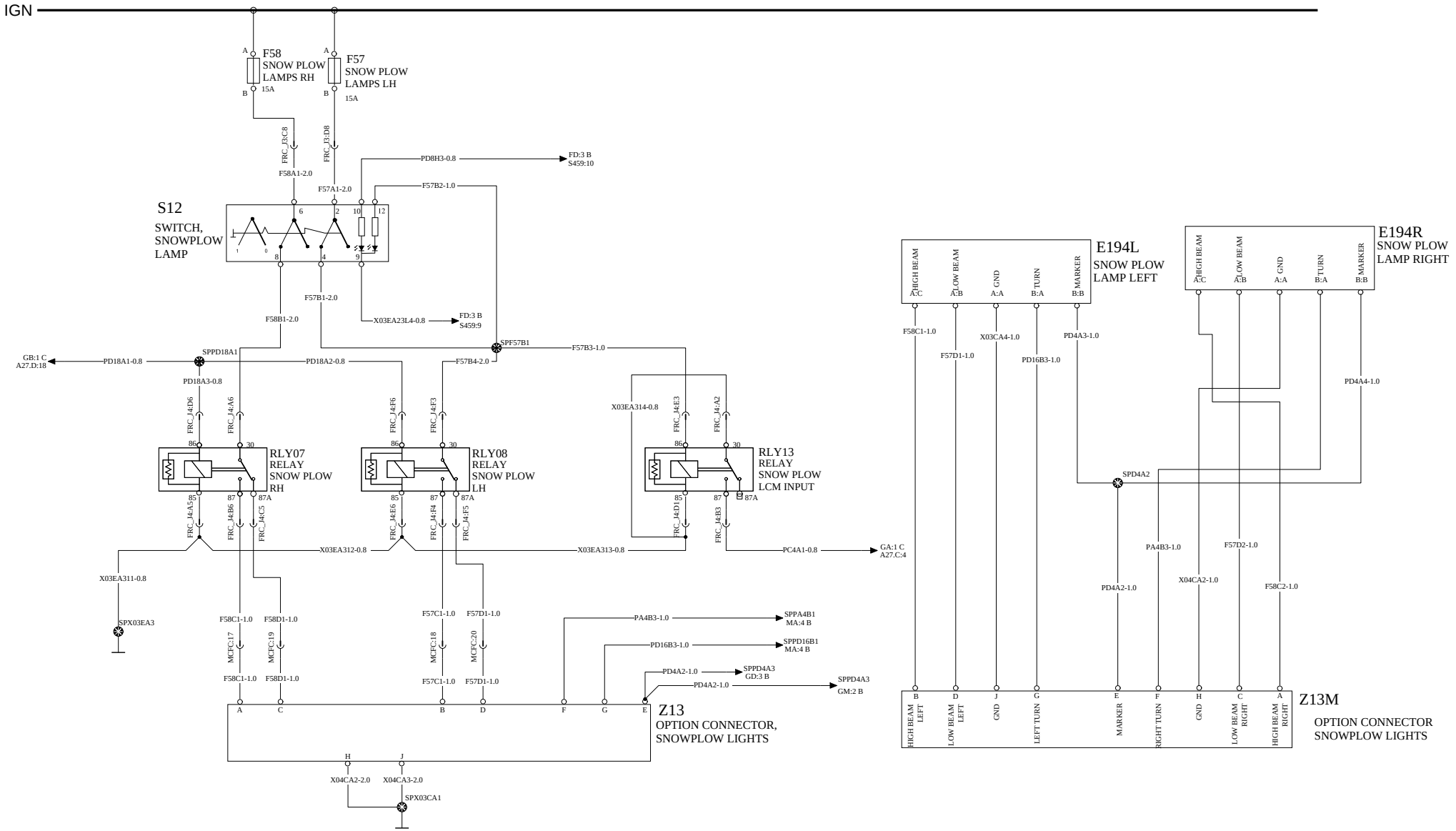

Volvo Truck Corporation	Document title WIRING DIAGRAM, 12V MACK CONVENTIONAL Document type PRODUCT SCHEMATIC	Document No 23970505	Issue 02	Volume 1 (1)	Page 53 (104)

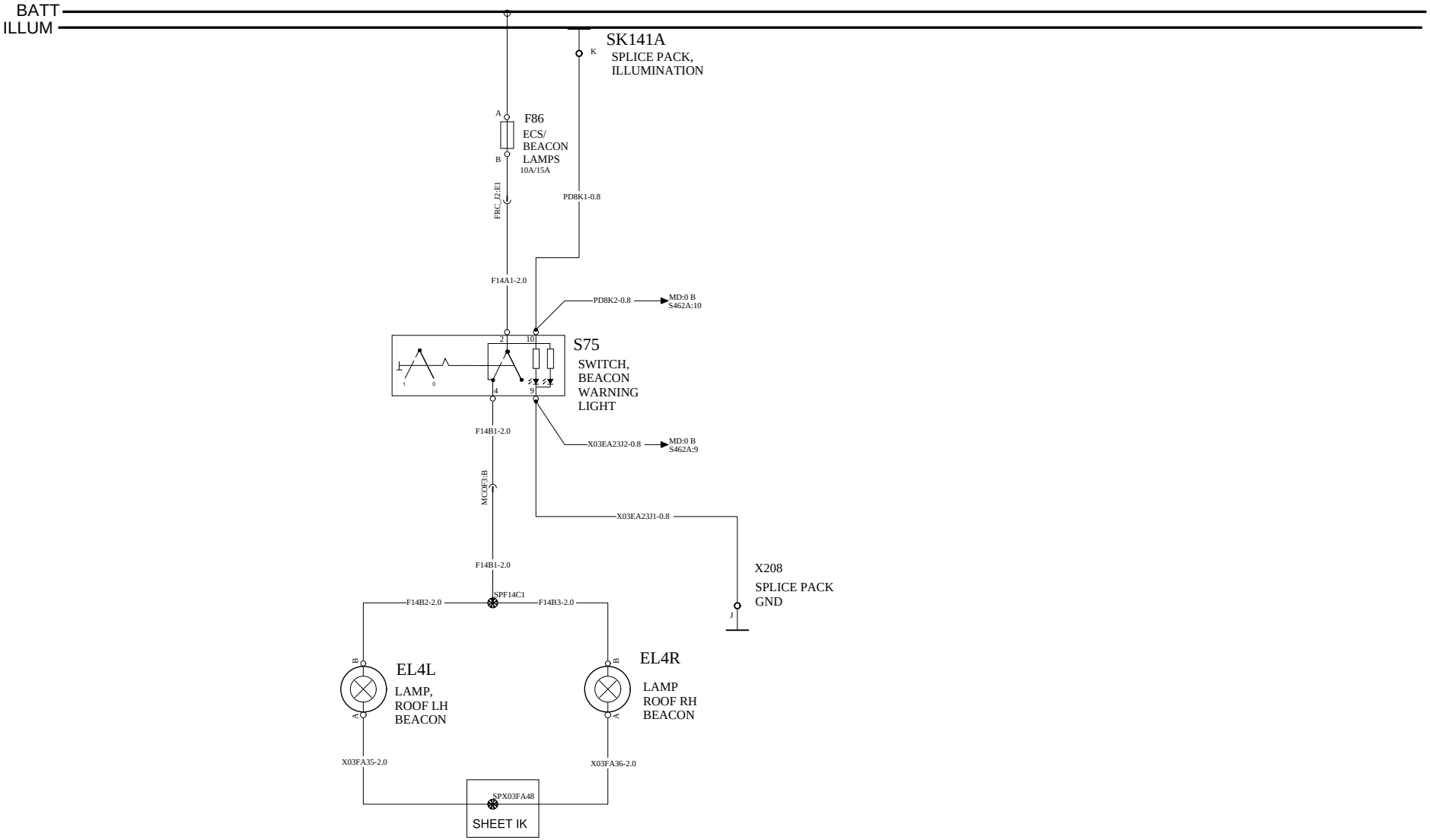

Volvo Truck Corporation	Document title WIRING DIAGRAM, 12V MACK CONVENTIONAL Document type PRODUCT SCHEMATIC	Document No 23970505	Issue 02	Volume 1 (1)	Page 54 (104)

HOOK UP LAMPS

WIRING DIAGRAM: GK

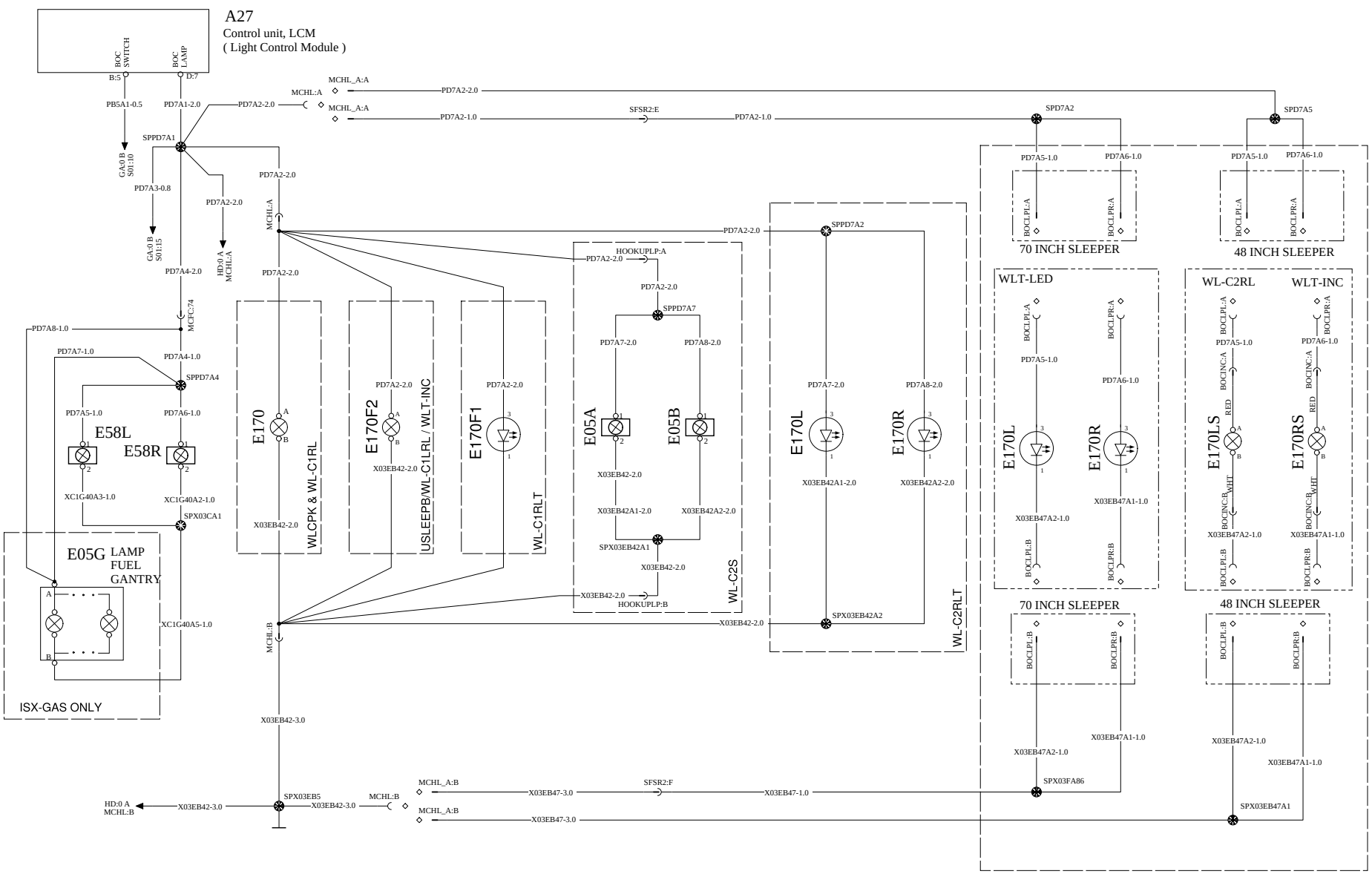

Volvo Truck Corporation	Document title WIRING DIAGRAM, 12V MACK CONVENTIONAL Document type PRODUCT SCHEMATIC	Document No 23970505	Issue 02	Volume 1 (1)	Page 55 (104)

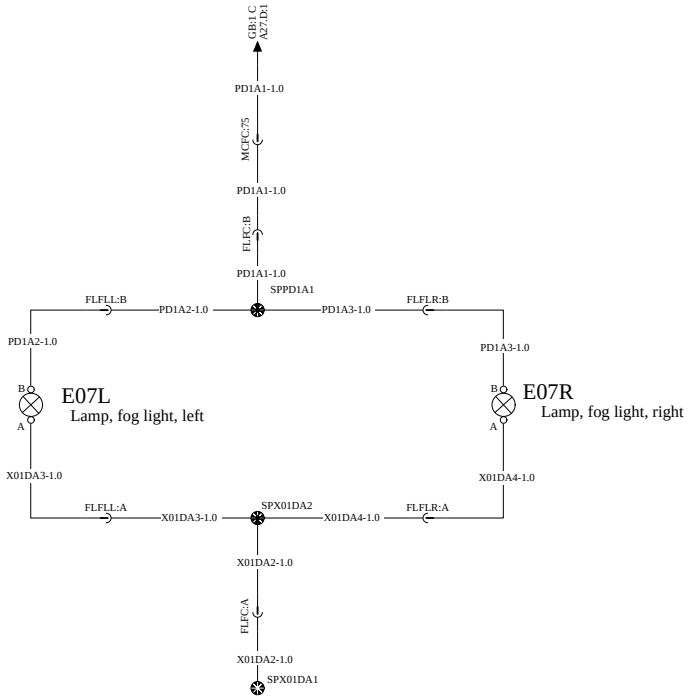
GB:1 C
A27:D1
PD1A1-1.0
MCFC:75
PD1A1-1.0
FLFC:B
PD1A1-1.0
SPPD1A1
FLFLL:B
PD1A2-1.0
PD1A3-1.0
FLFLR:B
PD1A2-1.0
PD1A3-1.0
B
A
E07L
Lamp, fog light, left
B
A
E07R
Lamp, fog light, right
X01DA3-1.0
X01DA4-1.0
FLFLL:A
X01DA3-1.0
SPX01DA2
X01DA4-1.0
FLFLR:A
X01DA2-1.0
FLFC:A
X01DA2-1.0
SPX01DA1

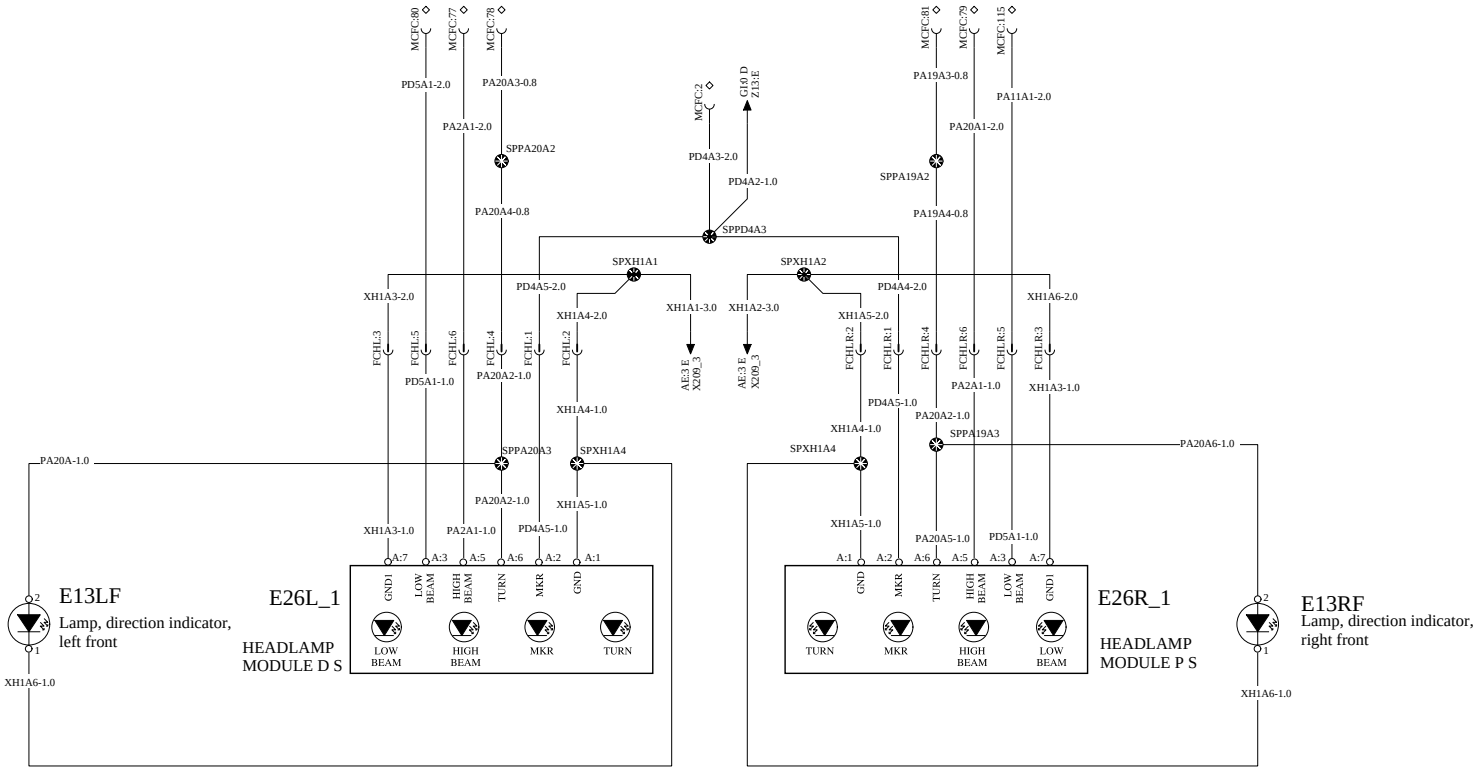

Volvo Truck Corporation	Document title WIRING DIAGRAM, 12V MACK CONVENTIONAL Document type PRODUCT SCHEMATIC	Document No 23970505	Issue 02	Volume 1 (1)	Page 57 (104)

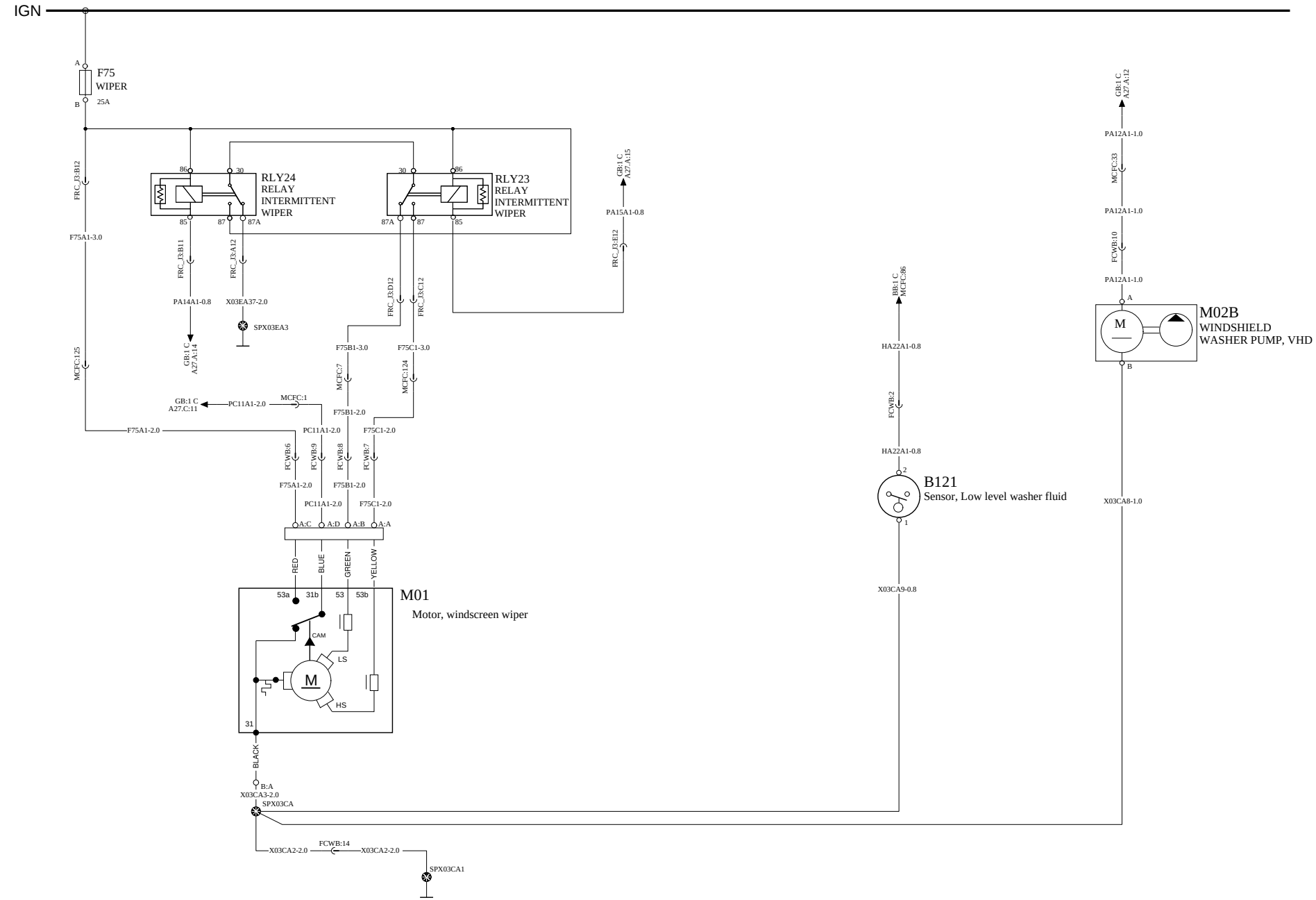

Volvo Truck Corporation	Document title: WIRING DIAGRAM, 12V MACK CONVENTIONAL Document type: PRODUCT SCHEMATIC	Document No: 23970505	Issue: 02	Volume: 1 (1)	Page: 58 (104)

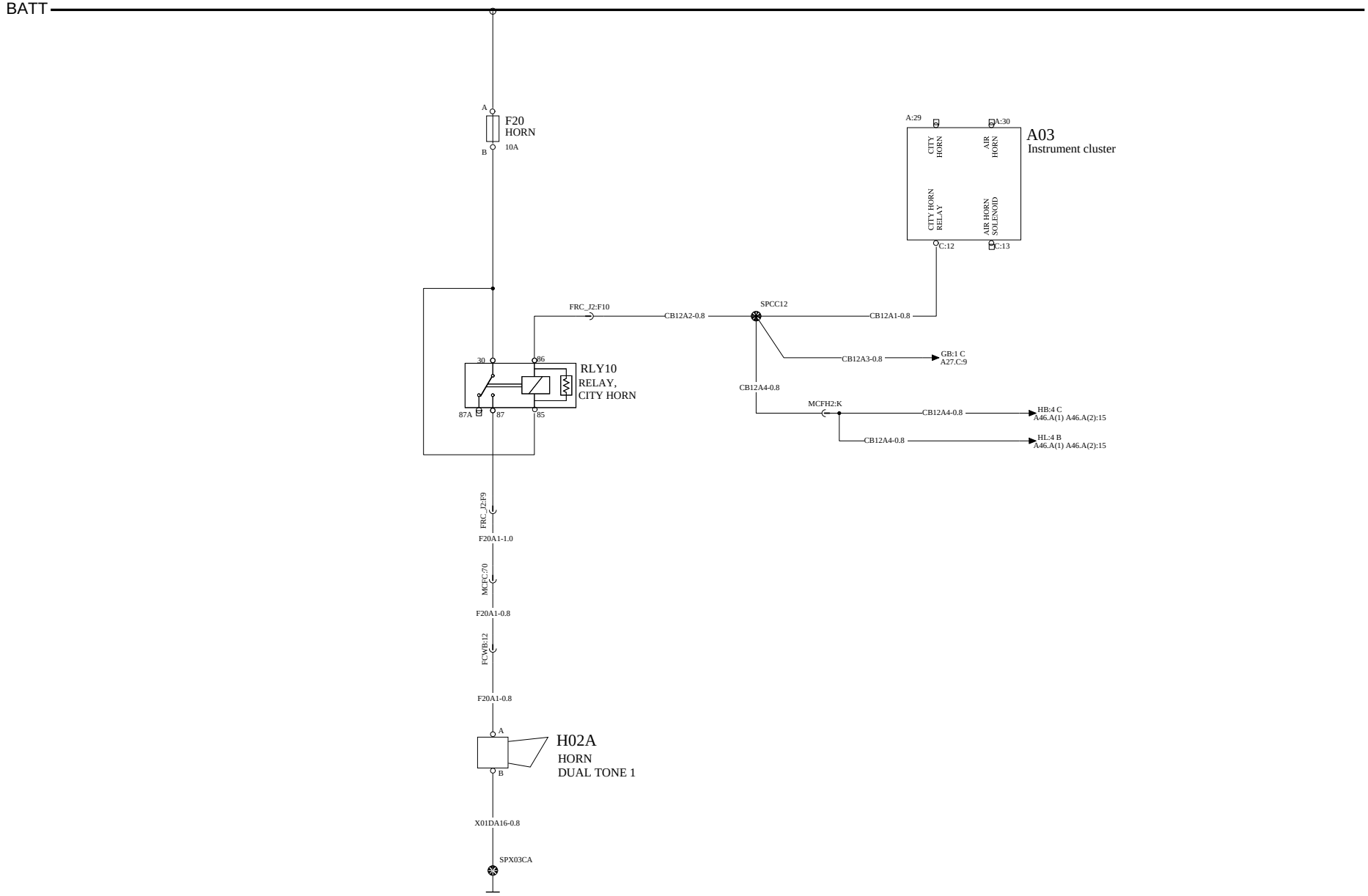

Volvo Truck Corporation	Document title WIRING DIAGRAM, 12V MACK CONVENTIONAL Document type PRODUCT SCHEMATIC	Document No 23970505	Issue 02	Volume 1 (1)	Page 59 (104)

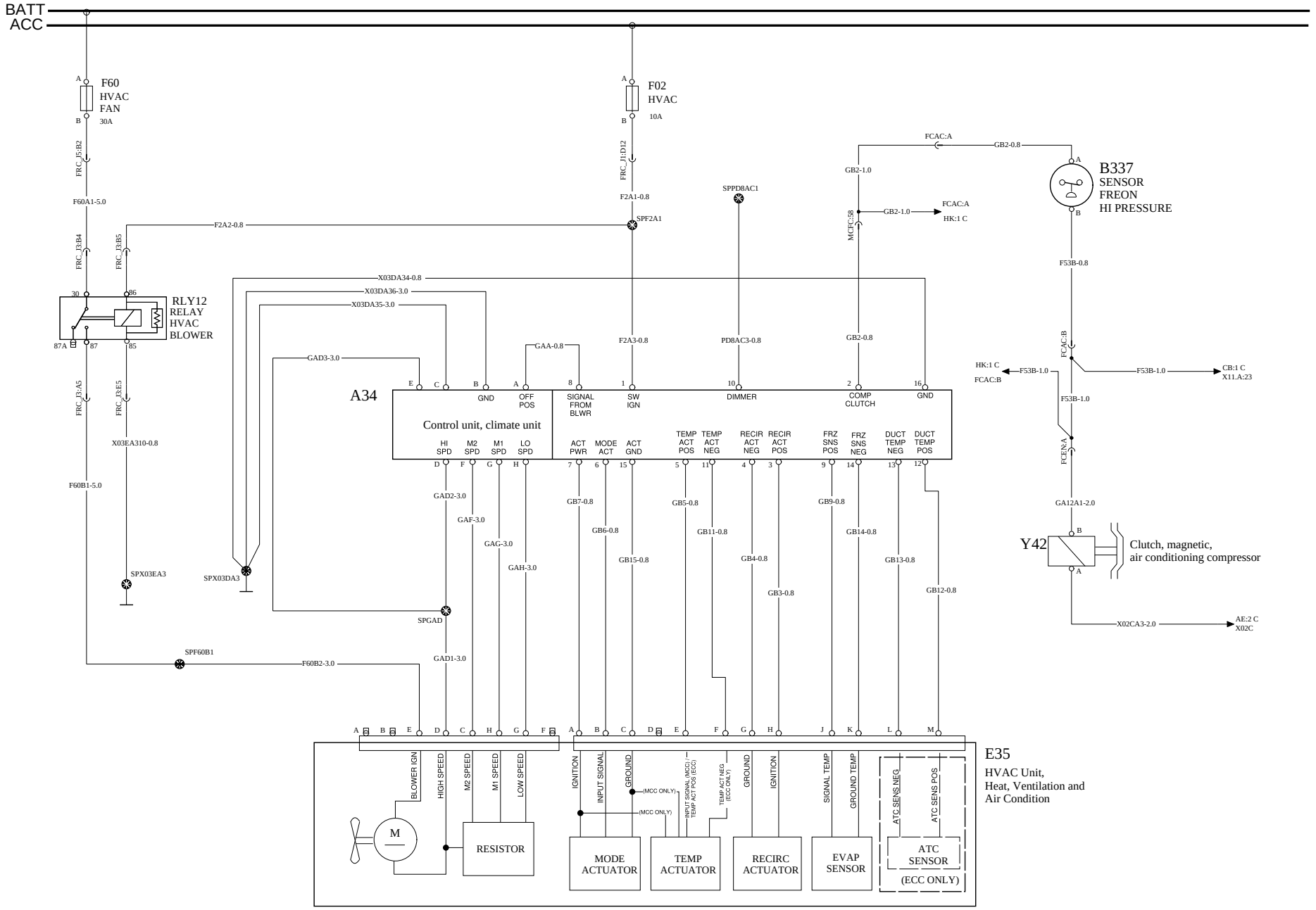

Volvo Truck Corporation	Document title WIRING DIAGRAM, 12V MACK CONVENTIONAL Document type PRODUCT SCHEMATIC	Document No 23970505	Issue 02	Volume 1 (1)	Page 60 (104)

SLEEPER CLIMATE CONTROL W/LECM 70" SLEEPER

WIRING DIAGRAM: HB

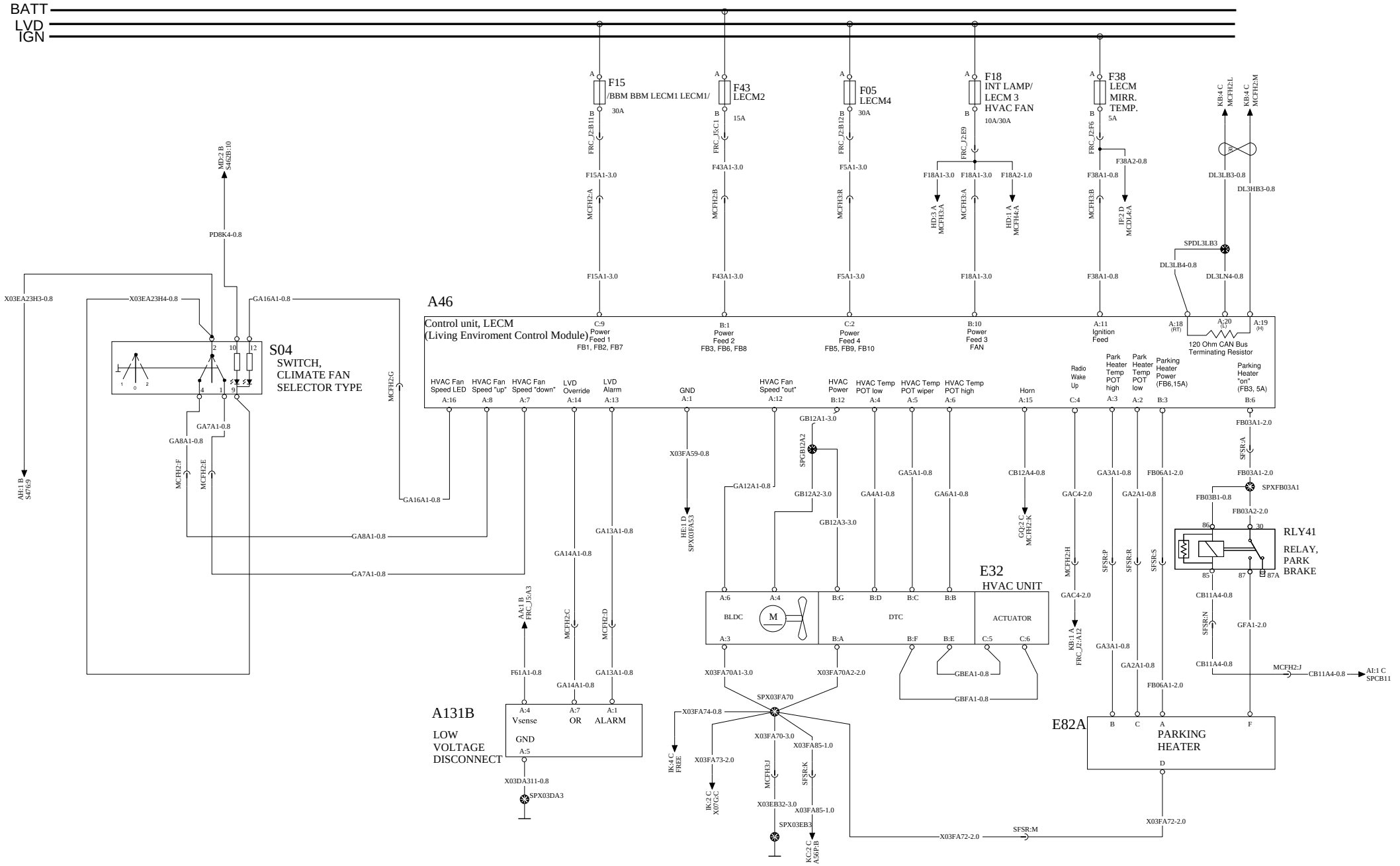

Document title	Document No	Issue	Volume	Page
WIRING DIAGRAM, 12V MACK CONVENTIONAL	23970505	02	1 (1)	61 (104)
Document type: PRODUCT SCHEMATIC				

Volvo Truck Corporation

SHORE POWER W/O INVERTER

WIRING DIAGRAM : HC

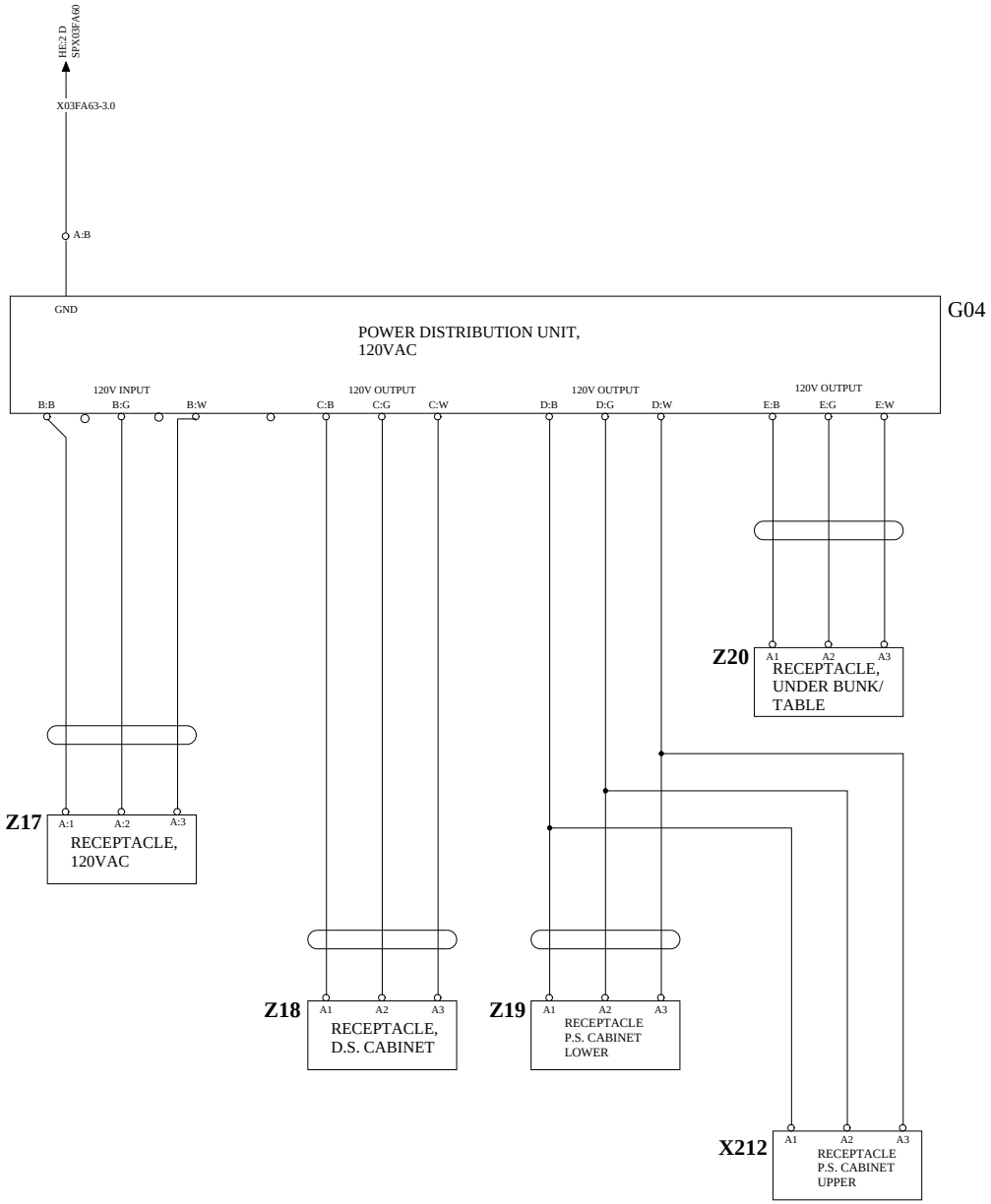

Volvo Truck Corporation	Document title WIRING DIAGRAM, 12V MACK CONVENTIONAL Document type PRODUCT SCHEMATIC	Document No 23970505	Issue 02	Volume 1 (1)	Page 62 (104)

SLEEPER FUNCTIONS W/O LECM 48 INCH BASIC

WIRING DIAGRAM: HD

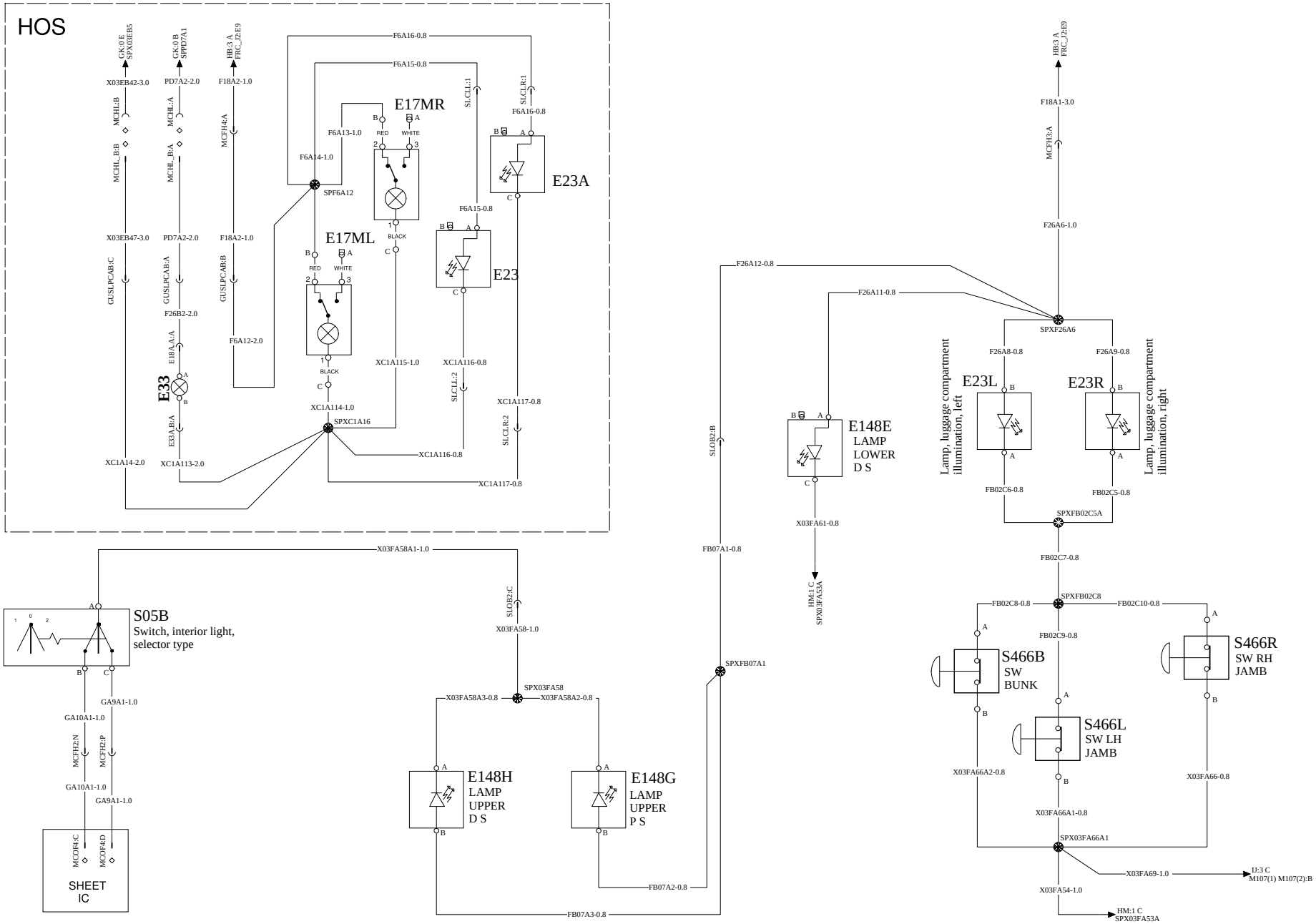

Volvo Truck Corporation	Document title: WIRING DIAGRAM, 12V MACK CONVENTIONAL Document type: PRODUCT SCHEMATIC	Document No: 23970505	Issue: 02	Volume: 1 (1)	Page: 63 (104)

LIGHTING AND POWER OUTLETS 70" SLEEPER

WIRING DIAGRAM: HE

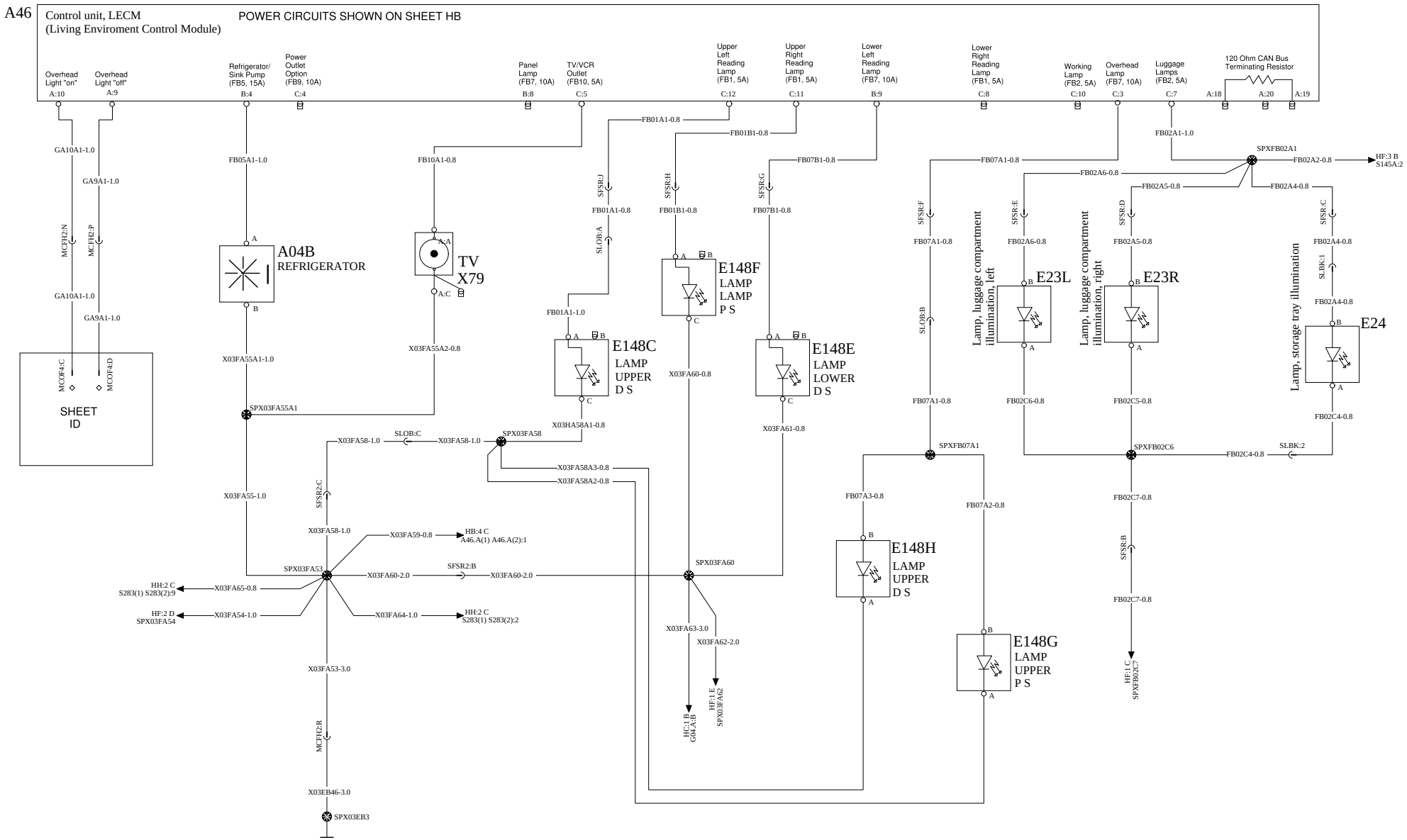

Document title	Document No	Issue	Volume	Page
WIRING DIAGRAM, 12V MACK CONVENTIONAL	23970505	02	1 (1)	64 (104)
Document type: PRODUCT SCHEMATIC				

Volvo Truck Corporation

SLEEPER COURTESY AND UNDER BUNK

WIRING DIAGRAM : HF

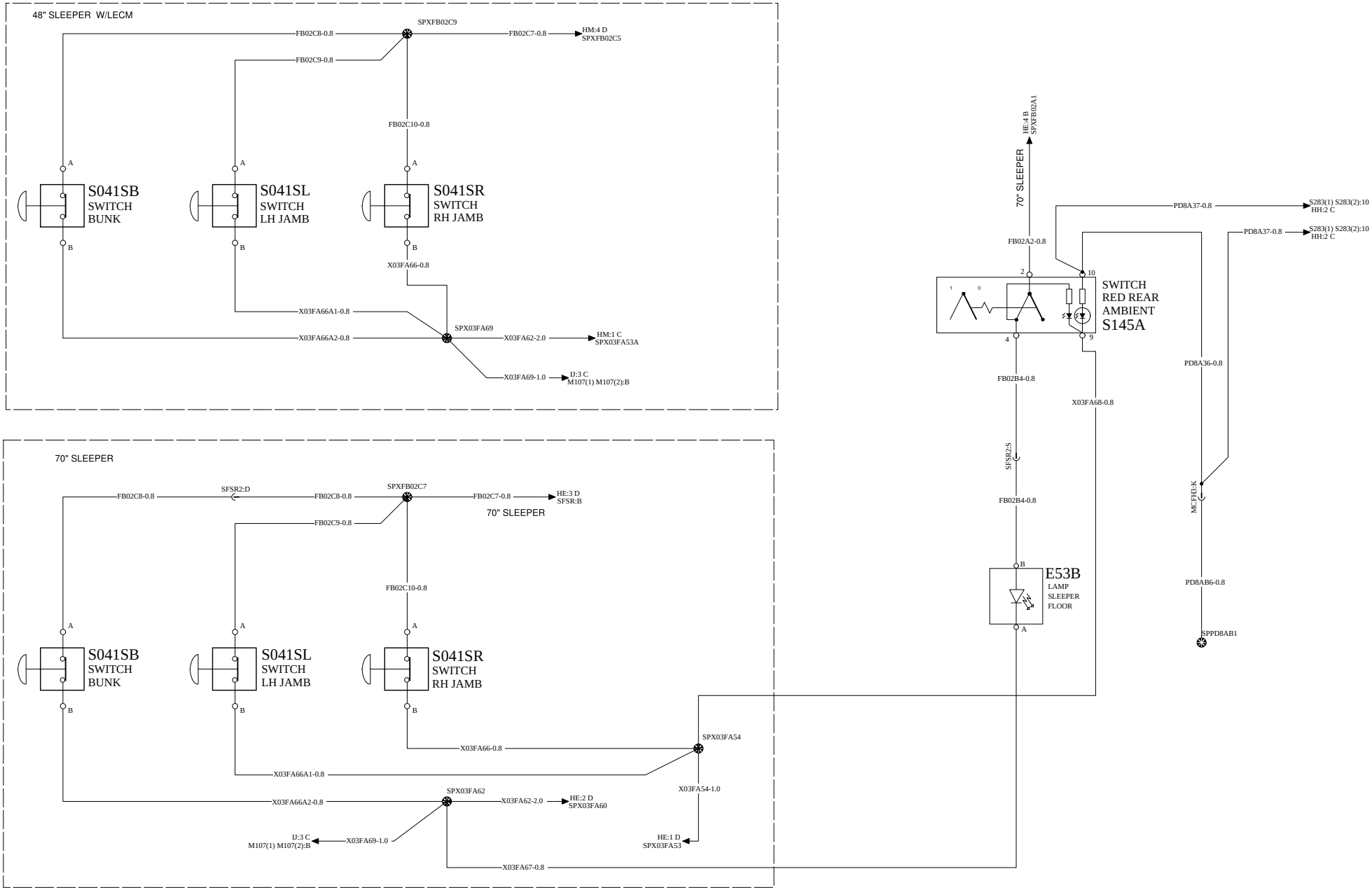

Volvo Truck Corporation	Document title WIRING DIAGRAM, 12V MACK CONVENTIONAL Document type PRODUCT SCHEMATIC	Document No 23970505	Issue 02	Volume 1 (1)	Page 65 (104)

SLEEPER PIPE LIGHTING SWITCH

WIRING DIAGRAM: HH

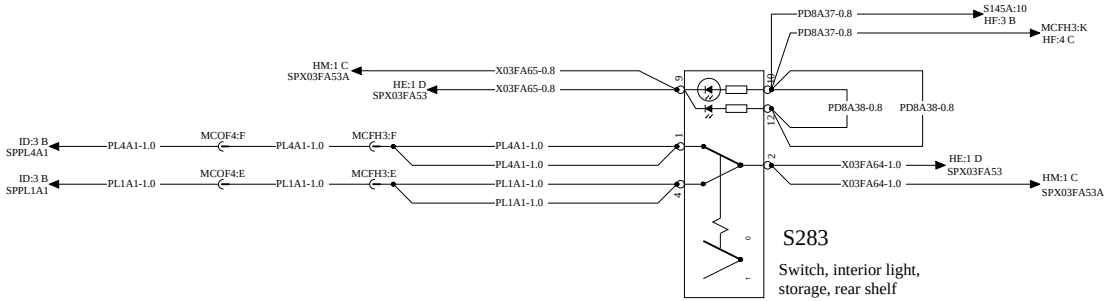

Volvo Truck Corporation	Document title WIRING DIAGRAM, 12V MACK CONVENTIONAL Document type PRODUCT SCHEMATIC	Document No 23970505	Issue 02	Volume 1 (1)	Page 66 (104)

SHORE POWER W/INVERTER

WIRING DIAGRAM: HI

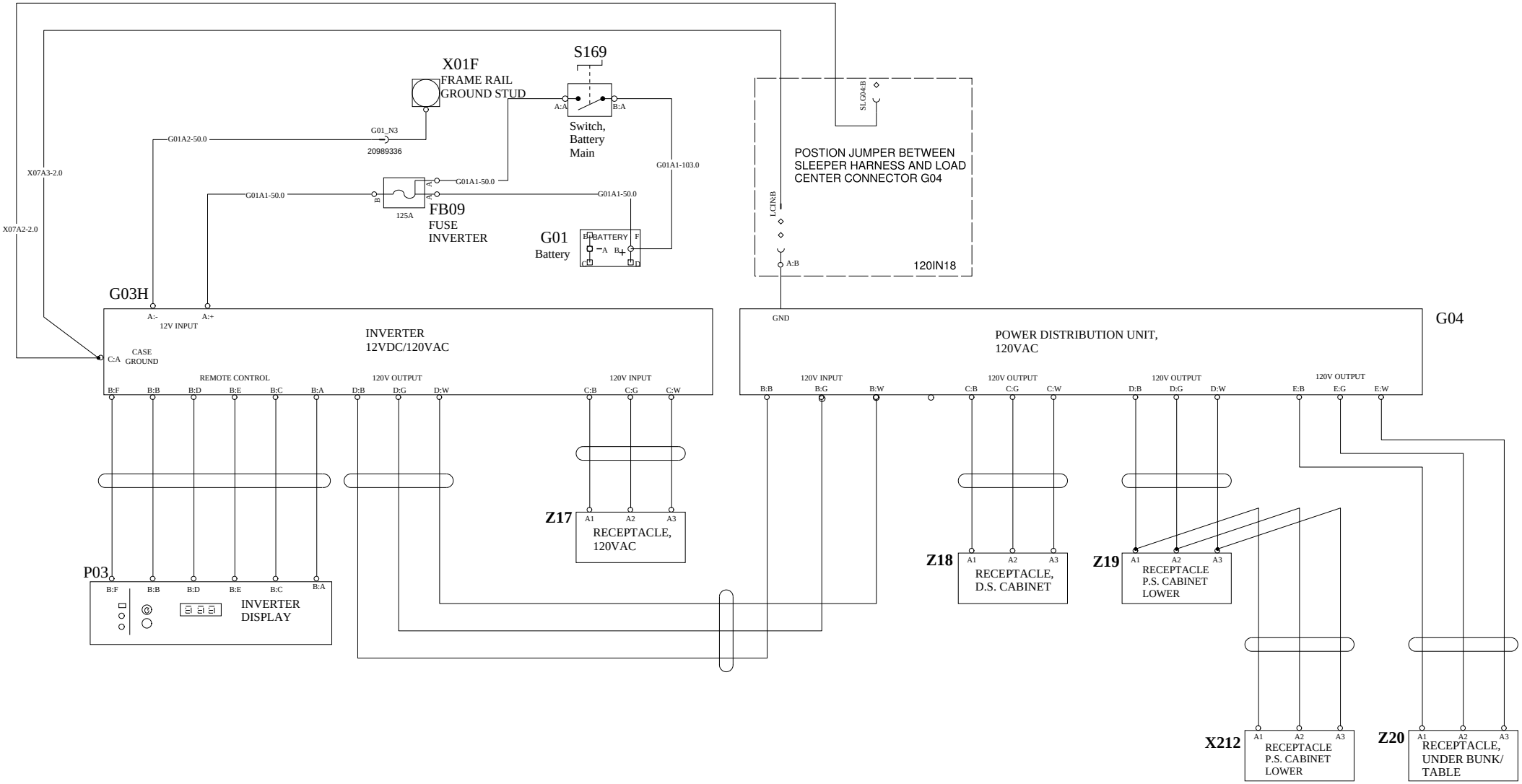

Volvo Truck Corporation	Document title WIRING DIAGRAM, 12V MACK CONVENTIONAL Document type PRODUCT SCHEMATIC	Document No 23970505	Issue 02	Volume 1 (1)	Page 67 (104)

AUXILLIARY 12V PARK COOLING SYSTEM

WIRING DIAGRAM: HJ

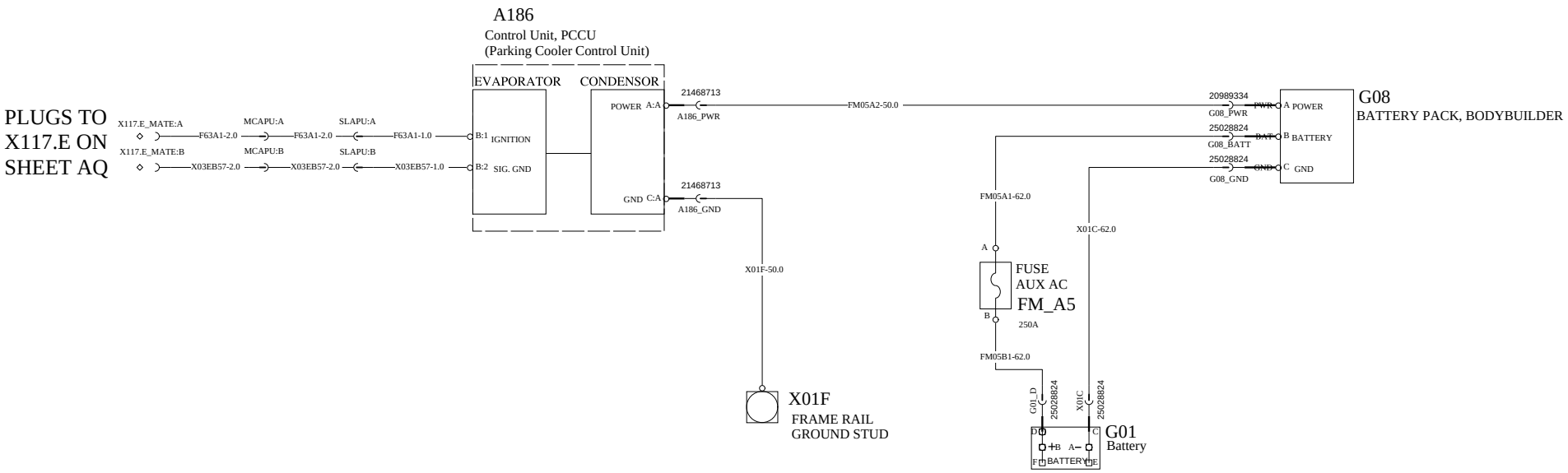

	Document title	Document No	Issue	Volume	Page
Volvo Truck Corporation	WIRING DIAGRAM, 12V MACK CONVENTIONAL Document type PRODUCT SCHEMATIC	23970505	02	1 (1)	68 (104)

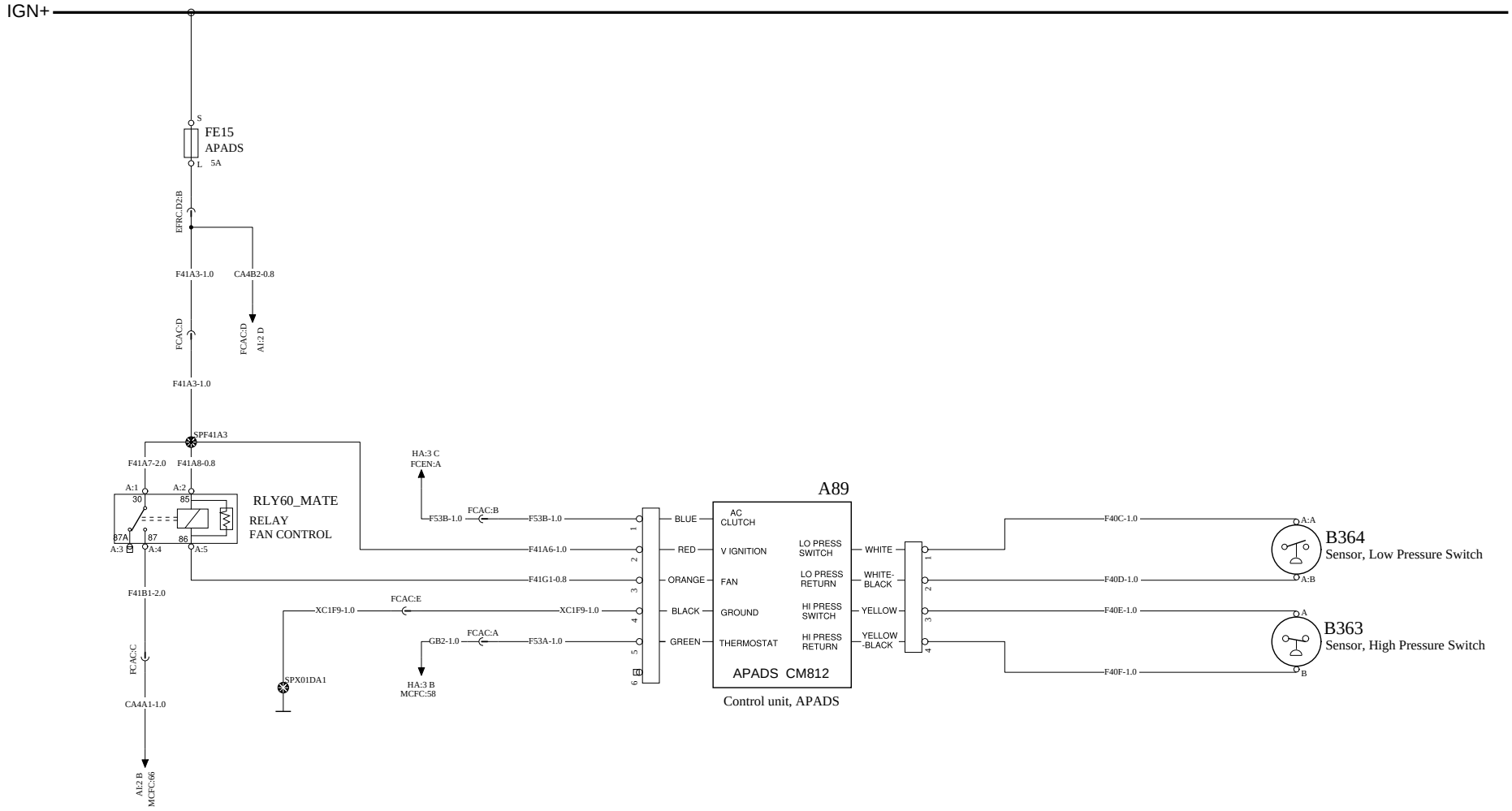

Volvo Truck Corporation	Document title WIRING DIAGRAM, 12V MACK CONVENTIONAL Document type PRODUCT SCHEMATIC	Document No 23970505	Issue 02	Volume 1 (1)	Page 69 (104)

SLEEPER CLIMATE CONTROL W/LECM 48" SLEEPER

WIRING DIAGRAM: HL

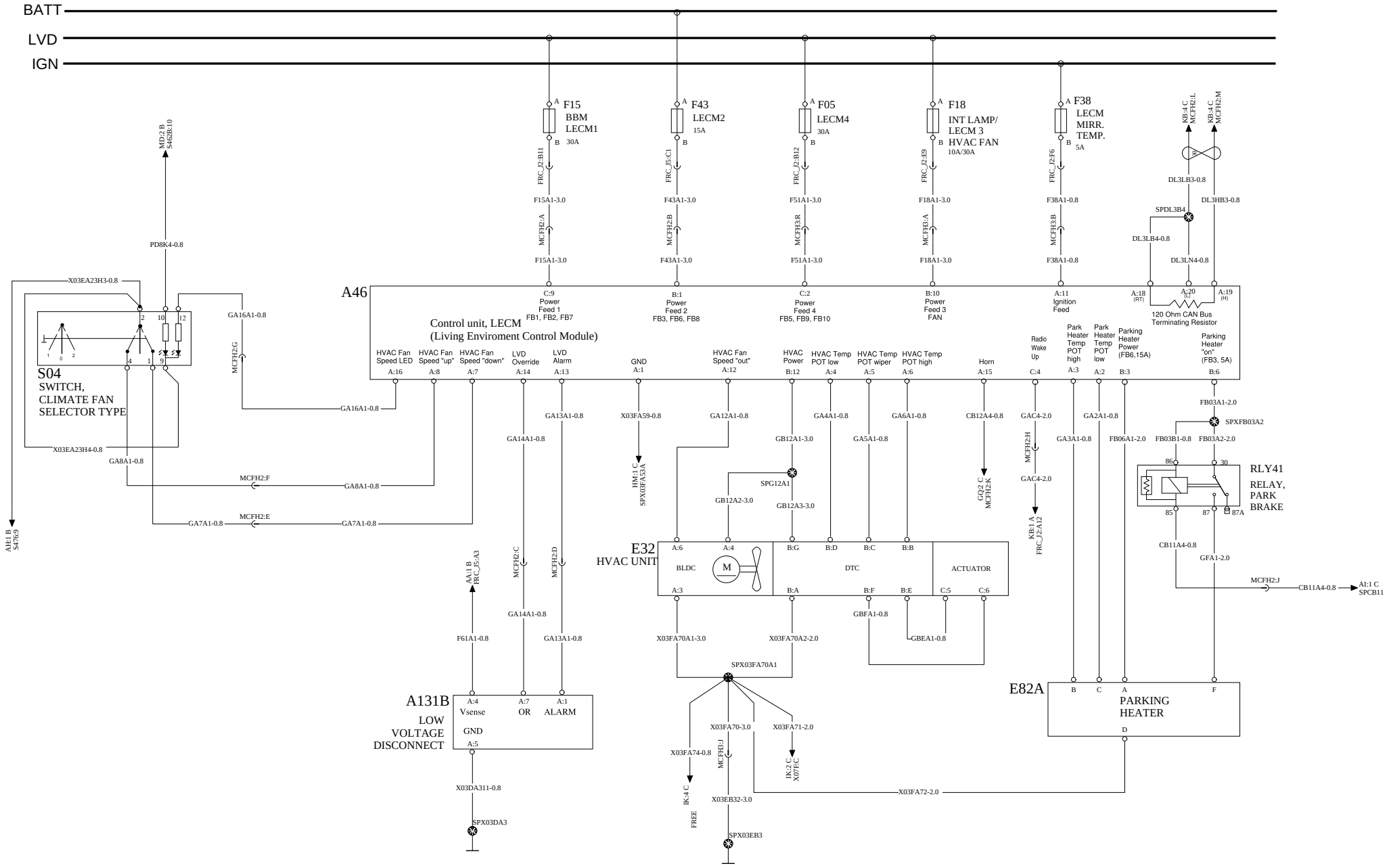

Volvo Truck Corporation	Document title WIRING DIAGRAM, 12V MACK CONVENTIONAL Document type PRODUCT SCHEMATIC	Document No 23970505	Issue 02	Volume 1 (1)	Page 70 (104)

LIGHTING AND POWER OUTLETS 48" SLEEPER

WIRING DIAGRAM: HM

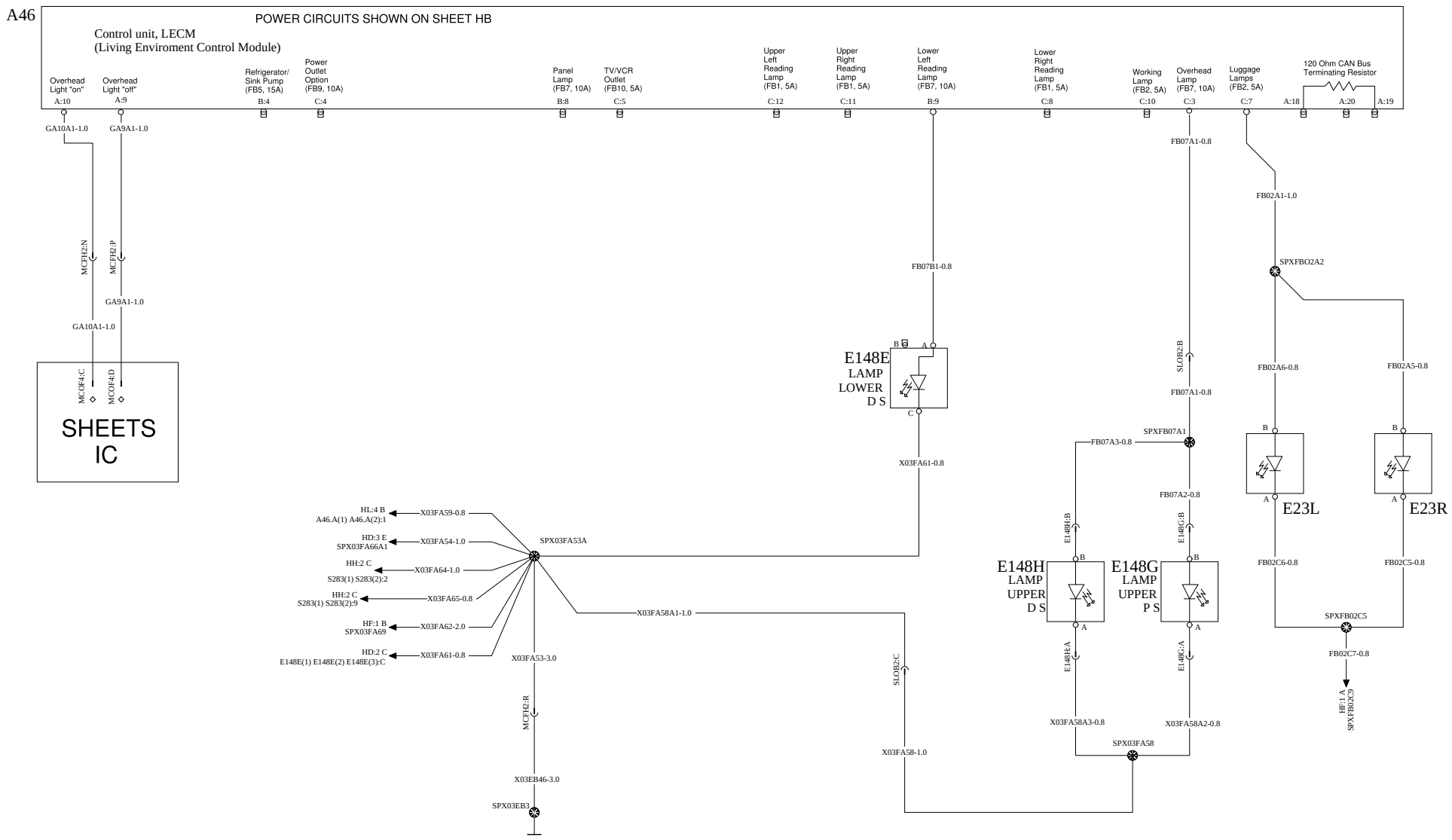

Volvo Truck Corporation	Document title WIRING DIAGRAM, 12V MACK CONVENTIONAL Document type PRODUCT SCHEMATIC	Document No 23970505	Issue 02	Volume 1 (1)	Page 71 (104)

COURTESY LIGHTS - DRIVING COMPARMENT

WIRING DIAGRAM: IA

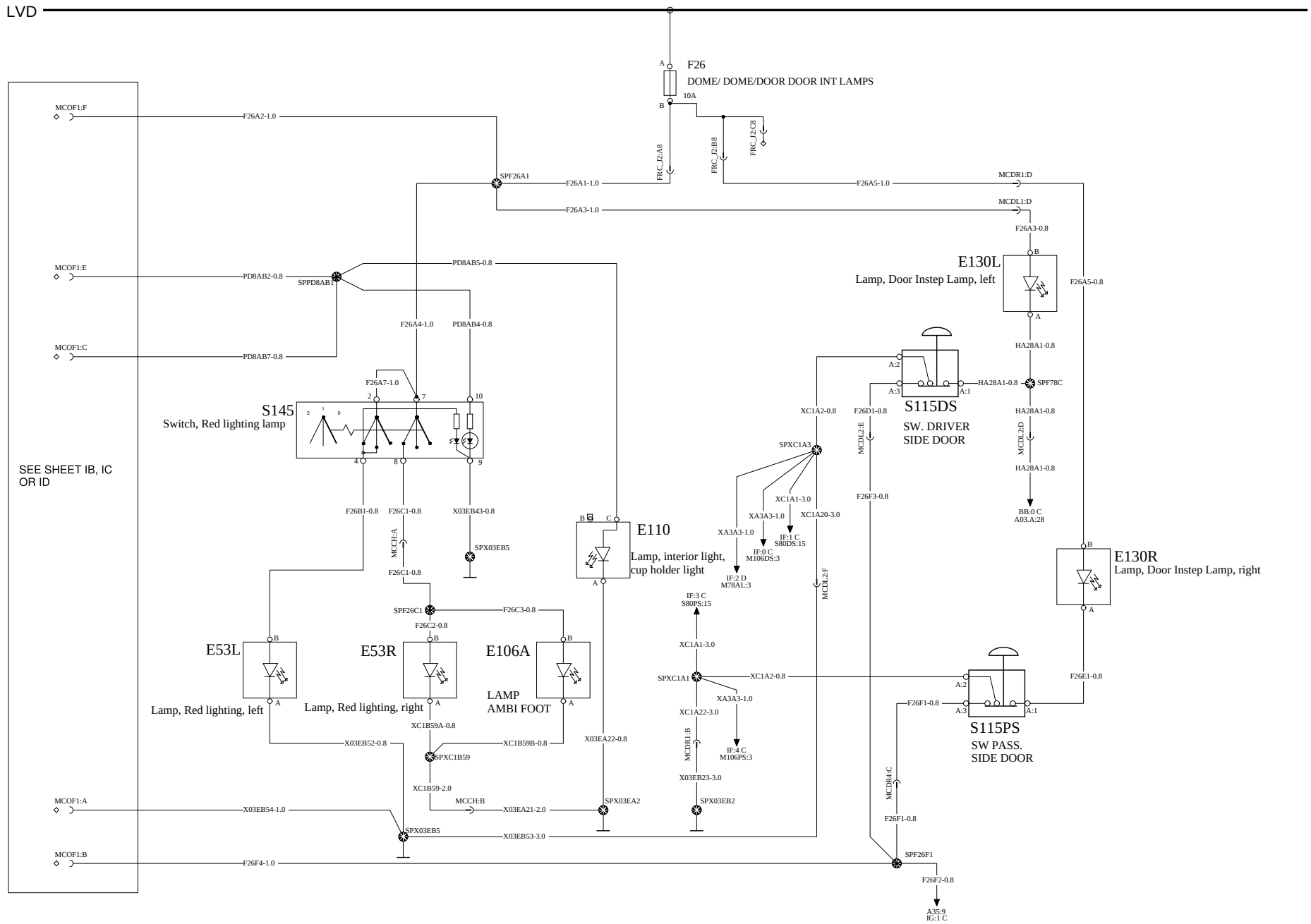

Volvo Truck Corporation	Document title WIRING DIAGRAM, 12V MACK CONVENTIONAL Document type PRODUCT SCHEMATIC	Document No 23970505	Issue 02	Volume 1 (1)	Page 72 (104)

COURTESY LIGHTS - DAYCAB AND HOS SLEEPER

WIRING DIAGRAM: IB

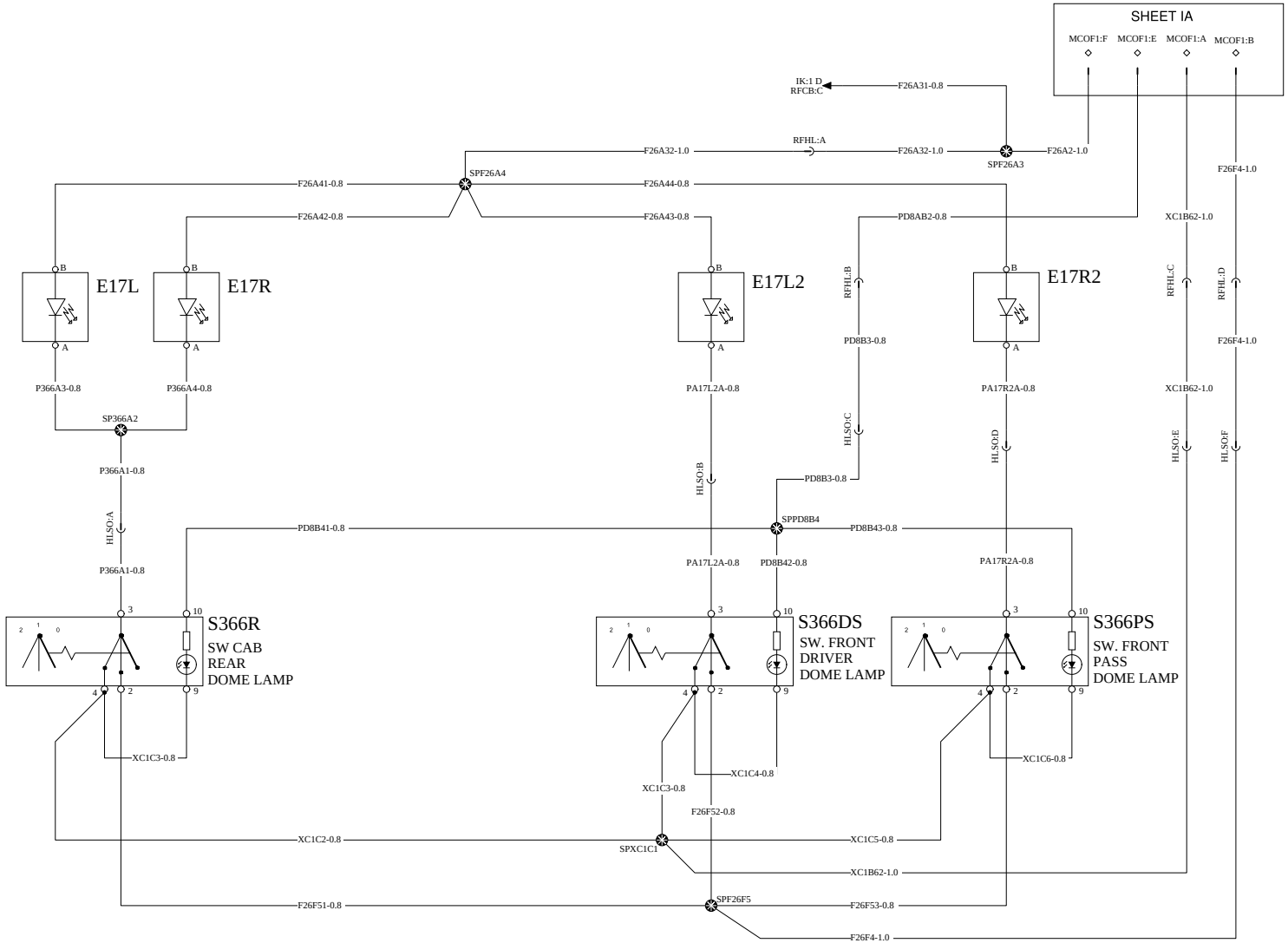

Volvo Truck Corporation	Document title WIRING DIAGRAM, 12V MACK CONVENTIONAL Document type PRODUCT SCHEMATIC	Document No 23970505	Issue 02	Volume 1 (1)	Page 73 (104)

COURTESY LIGHTS - 48" SLEEPER

WIRING DIAGRAM: IC

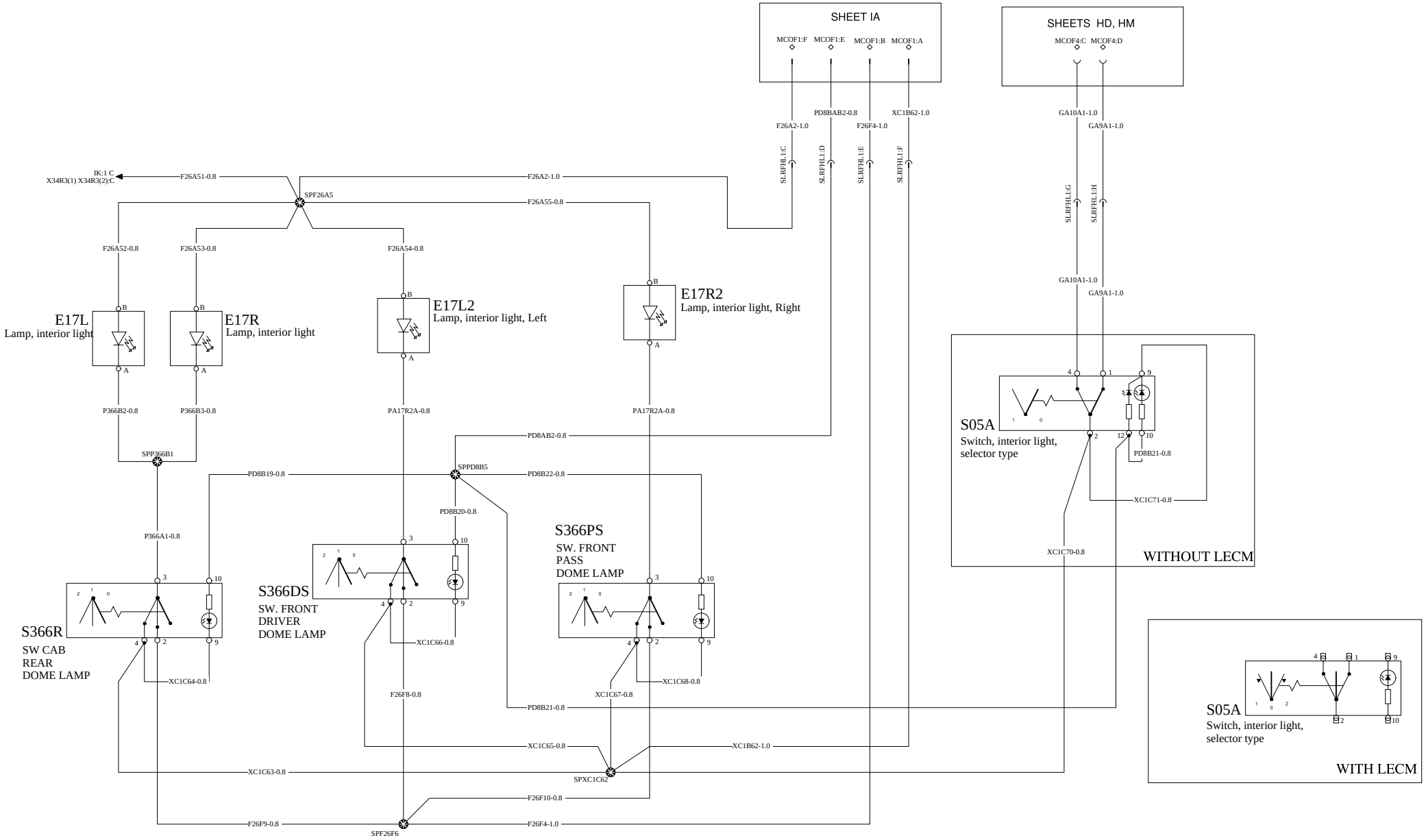

Volvo Truck Corporation	Document title WIRING DIAGRAM, 12V MACK CONVENTIONAL Document type PRODUCT SCHEMATIC	Document No 23970505	Issue 02	Volume 1 (1)	Page 74 (104)

COURTESY LIGHTS - 70" SLEEPER

WIRING DIAGRAM: ID

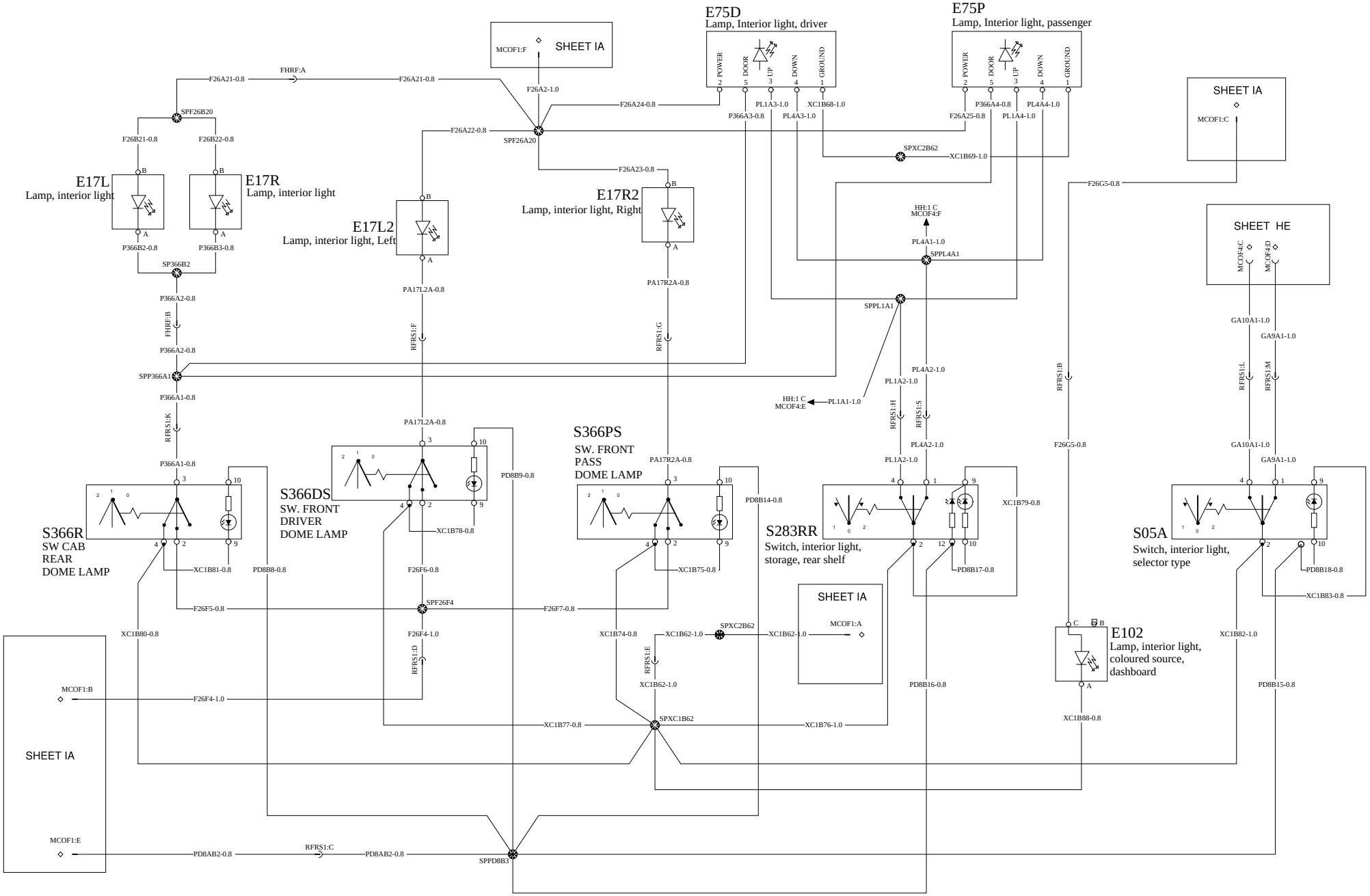

Volvo Truck Corporation	Document title WIRING DIAGRAM, 12V MACK CONVENTIONAL Document type PRODUCT SCHEMATIC	Document No 23970505	Issue 02	Volume 1 (1)	Page 75 (104)

POWER WINDOWS/MIRRORS/LOCKS

WIRING DIAGRAM: IF

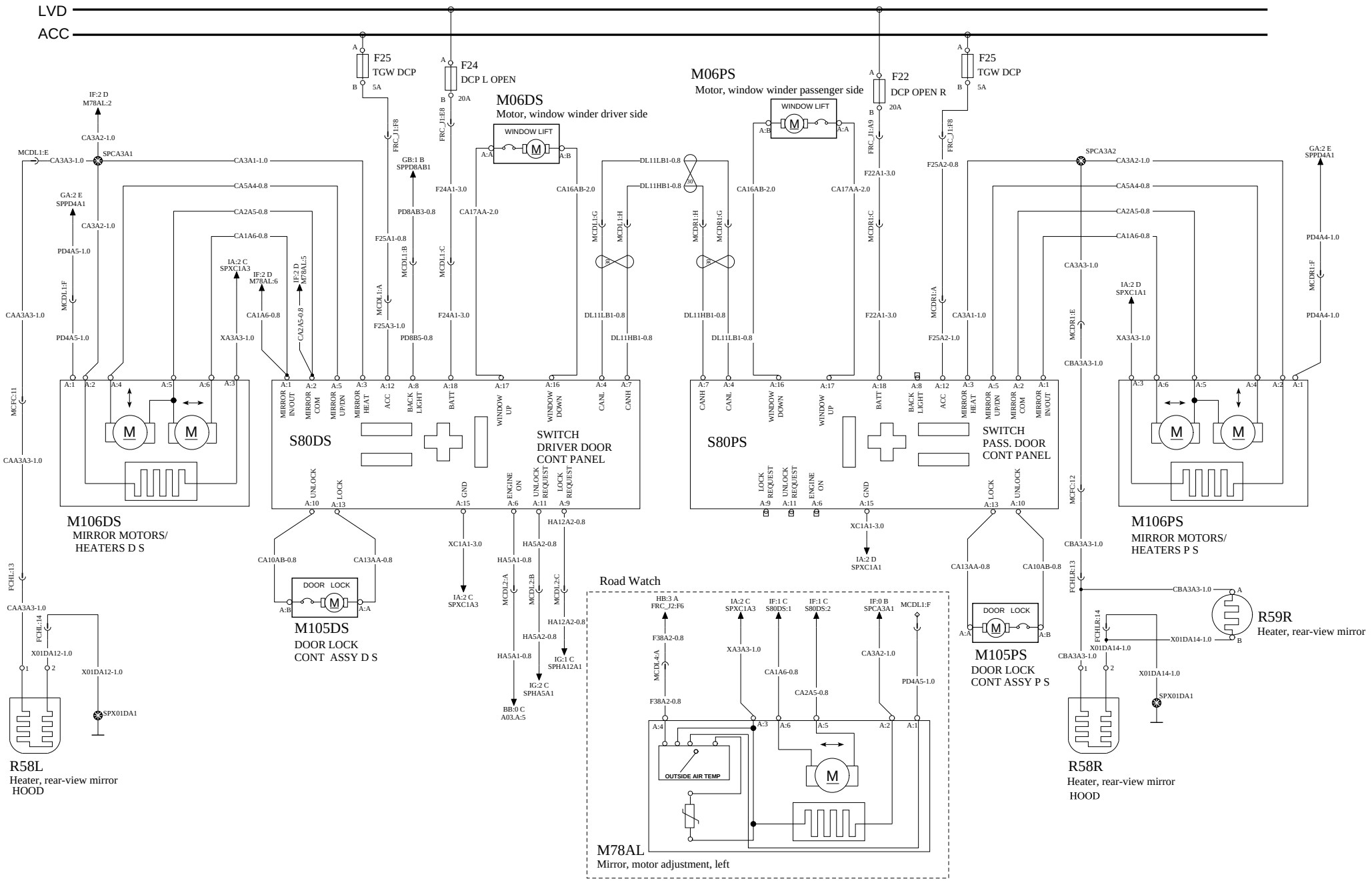

Volvo Truck Corporation	Document title WIRING DIAGRAM, 12V MACK CONVENTIONAL Document type PRODUCT SCHEMATIC	Document No 23970505	Issue 02	Volume 1 (1)	Page 76 (104)

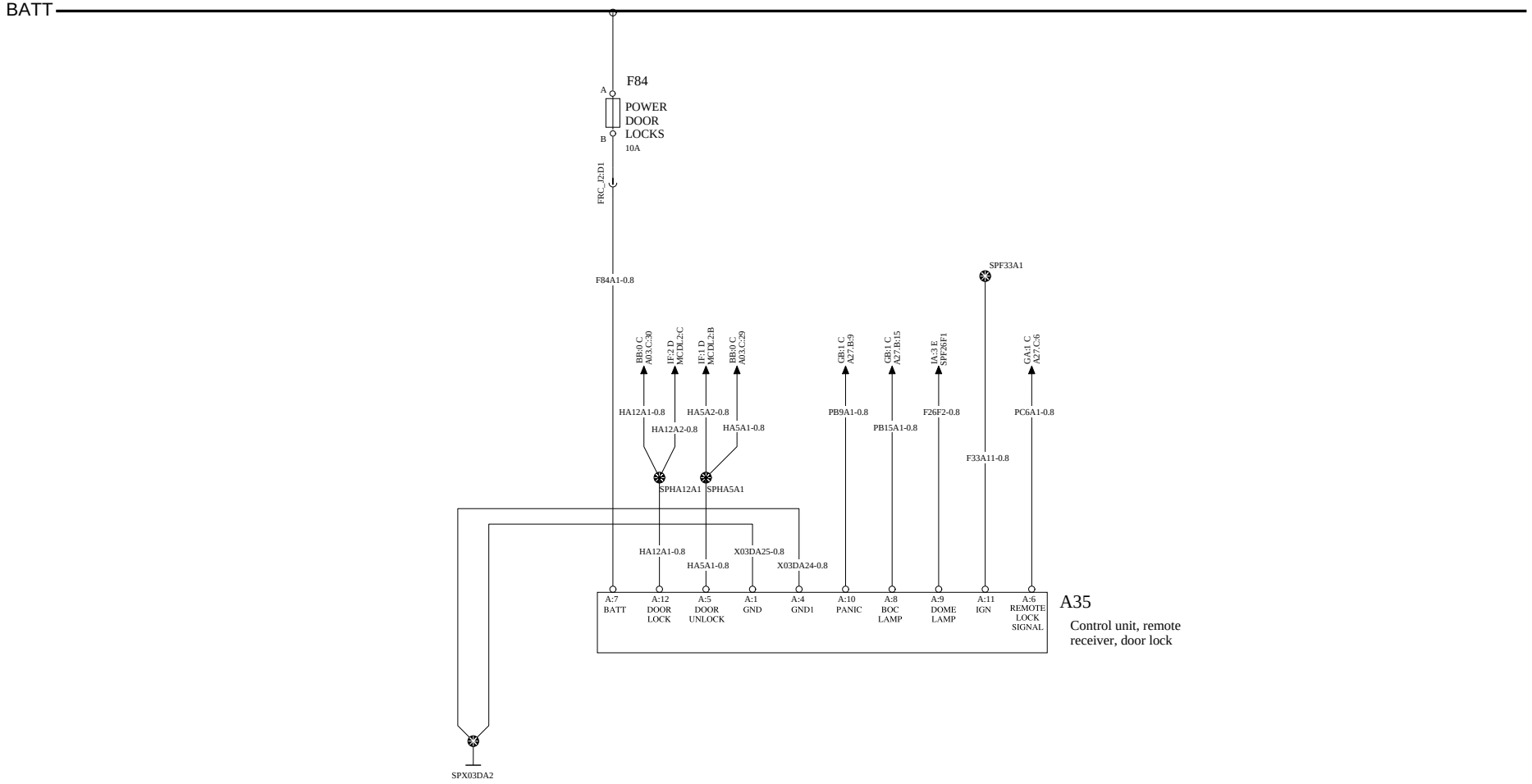

	Document title	Document No	Issue	Volume	Page
Volvo Truck Corporation	WIRING DIAGRAM, 12V MACK CONVENTIONAL Document type PRODUCT SCHEMATIC	23970505	02	1 (1)	77 (104)

WIRING DIAGRAM: IH

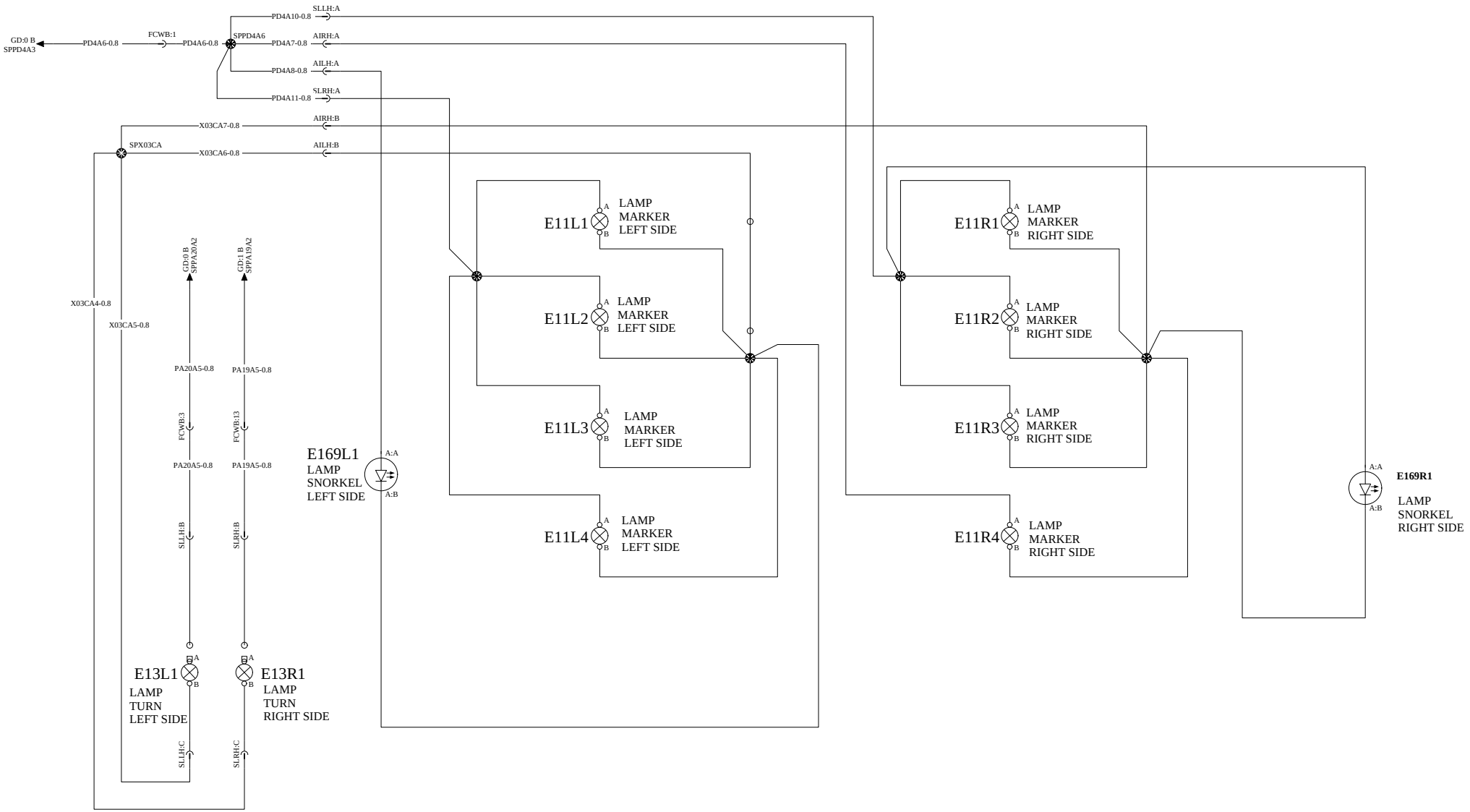

Volvo Truck Corporation	Document title WIRING DIAGRAM, 12V MACK CONVENTIONAL Document type PRODUCT SCHEMATIC	Document No 23970505	Issue 02	Volume 1 (1)	Page 78 (104)

HEATED SEATS/SEATBELT REMINDER/HEATED WINDSHIELD

WIRING DIAGRAM: IJ

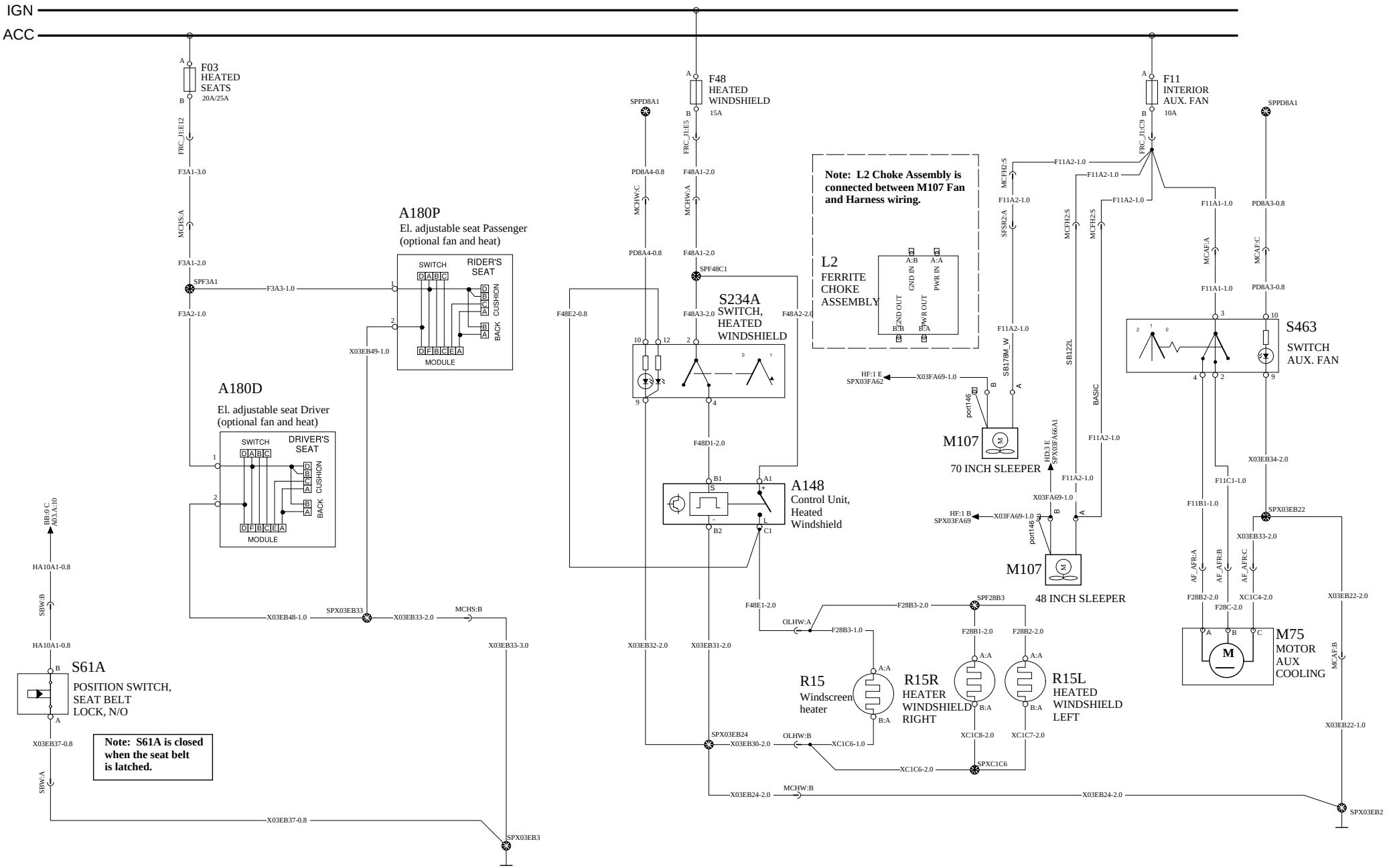

Volvo Truck Corporation	Document title WIRING DIAGRAM, 12V MACK CONVENTIONAL Document type PRODUCT SCHEMATIC	Document No 23970505	Issue 02	Volume 1 (1)	Page 79 (104)

CIGAR LIGHTER / AUX POWER

WIRING DIAGRAM: IK

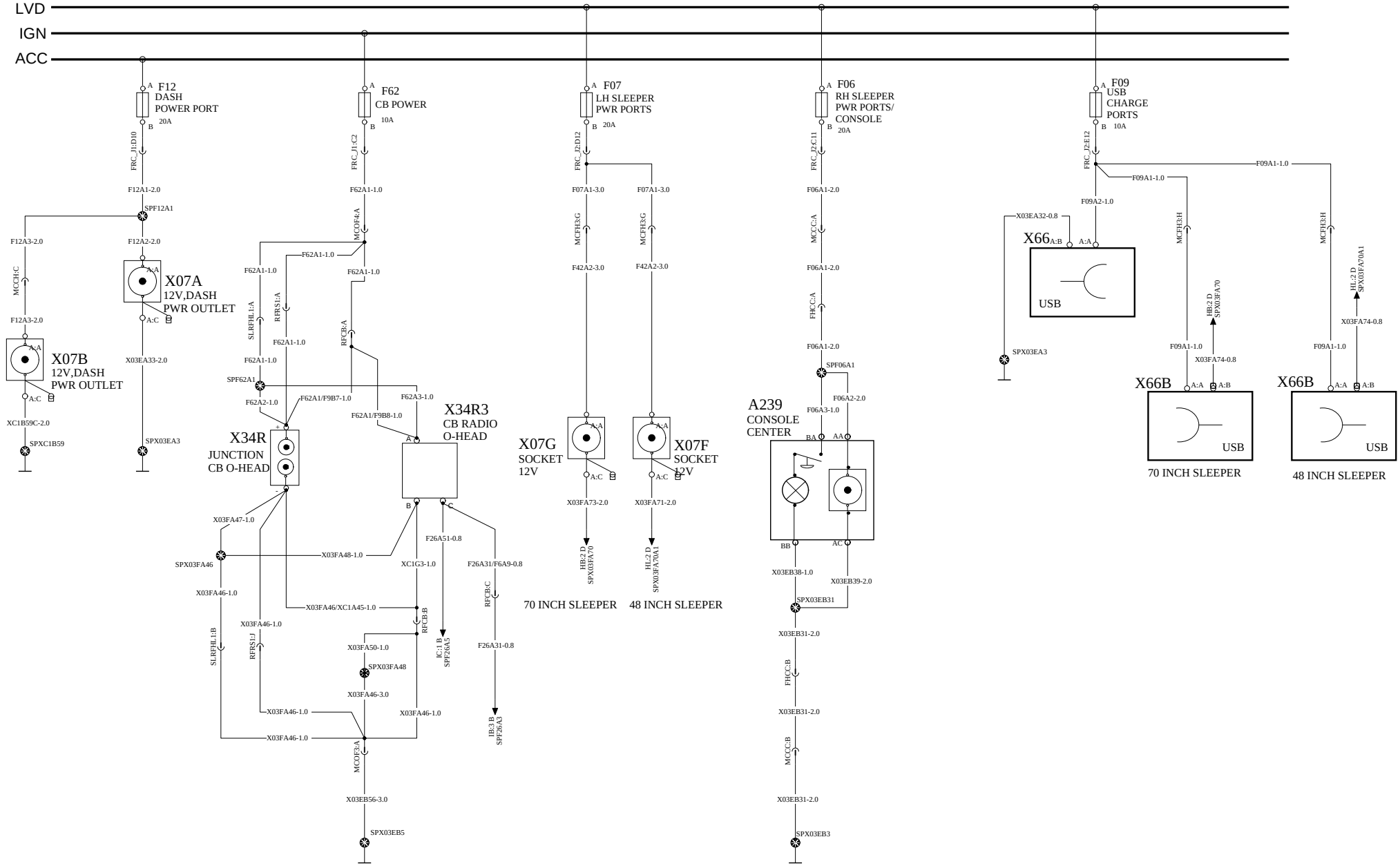

Volvo Truck Corporation	Document title WIRING DIAGRAM, 12V MACK CONVENTIONAL Document type PRODUCT SCHEMATIC	Document No 23970505	Issue 02	Volume 1 (1)	Page 80 (104)

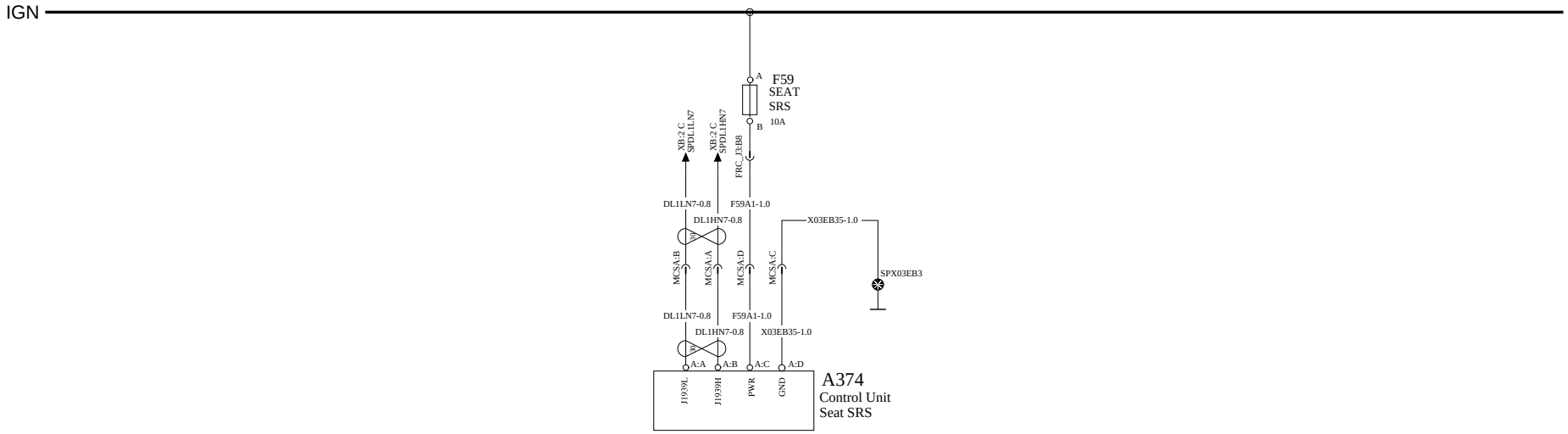
IGN
A
F59
SEAT
SRS
10A
B
XB:2 C
SPDL1LN7
XB:2 C
SPDL1HN7
FRC_J3:B8
DL1LN7-0.8
F59A1-1.0
DL1HN7-0.8
X03EB35-1.0
MCSA:B
MCSA:A
MCSA:D
MCSA:C
SPX03EB3
DL1LN7-0.8
F59A1-1.0
DL1HN7-0.8
X03EB35-1.0
A:A
A:B
A:C
A:D
J1939L
J1939H
PWR
GND
A374
Control Unit
Seat SRS

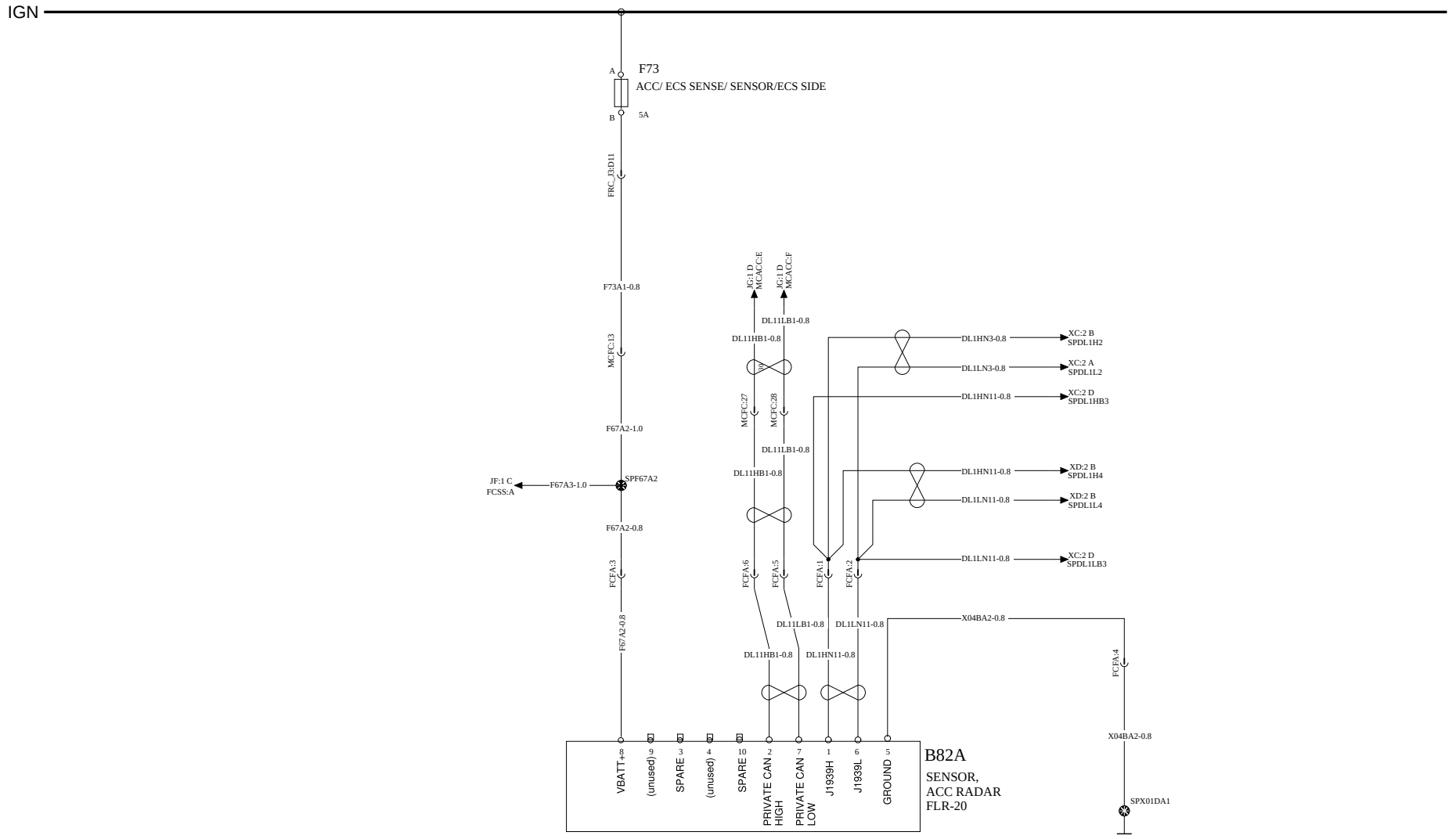

Volvo Truck Corporation	Document title: WIRING DIAGRAM, 12V MACK CONVENTIONAL Document type: PRODUCT SCHEMATIC	Document No: 23970505	Issue: 02	Volume: 1 (1)	Page: 82 (104)

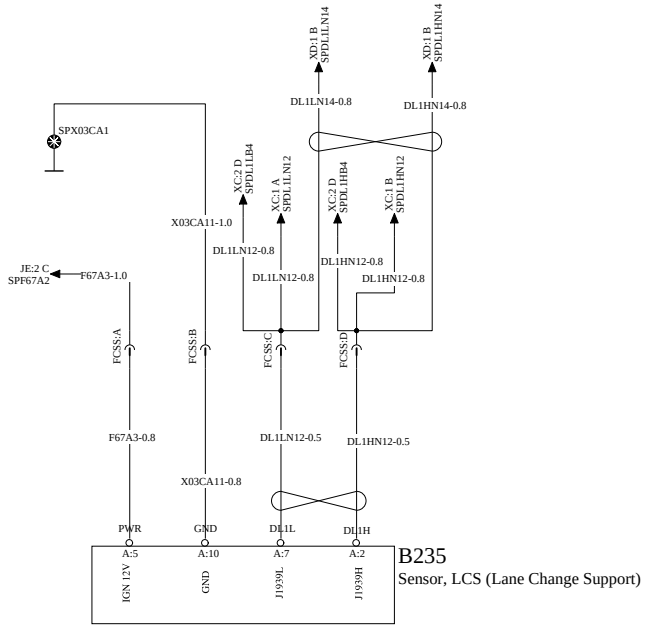

AERO/CLASSIC

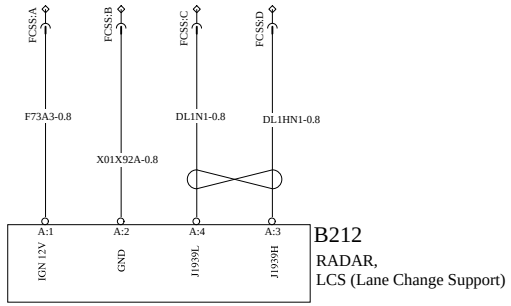

CONSTRUC

Volvo Truck Corporation	Document title WIRING DIAGRAM, 12V MACK CONVENTIONAL Document type PRODUCT SCHEMATIC	Document No 23970505	Issue 02	Volume 1 (1)	Page 83 (104)

LANE DEPARTURE WARNING -DAYCAB AND 48" SLEEPER

WIRING DIAGRAM: JG

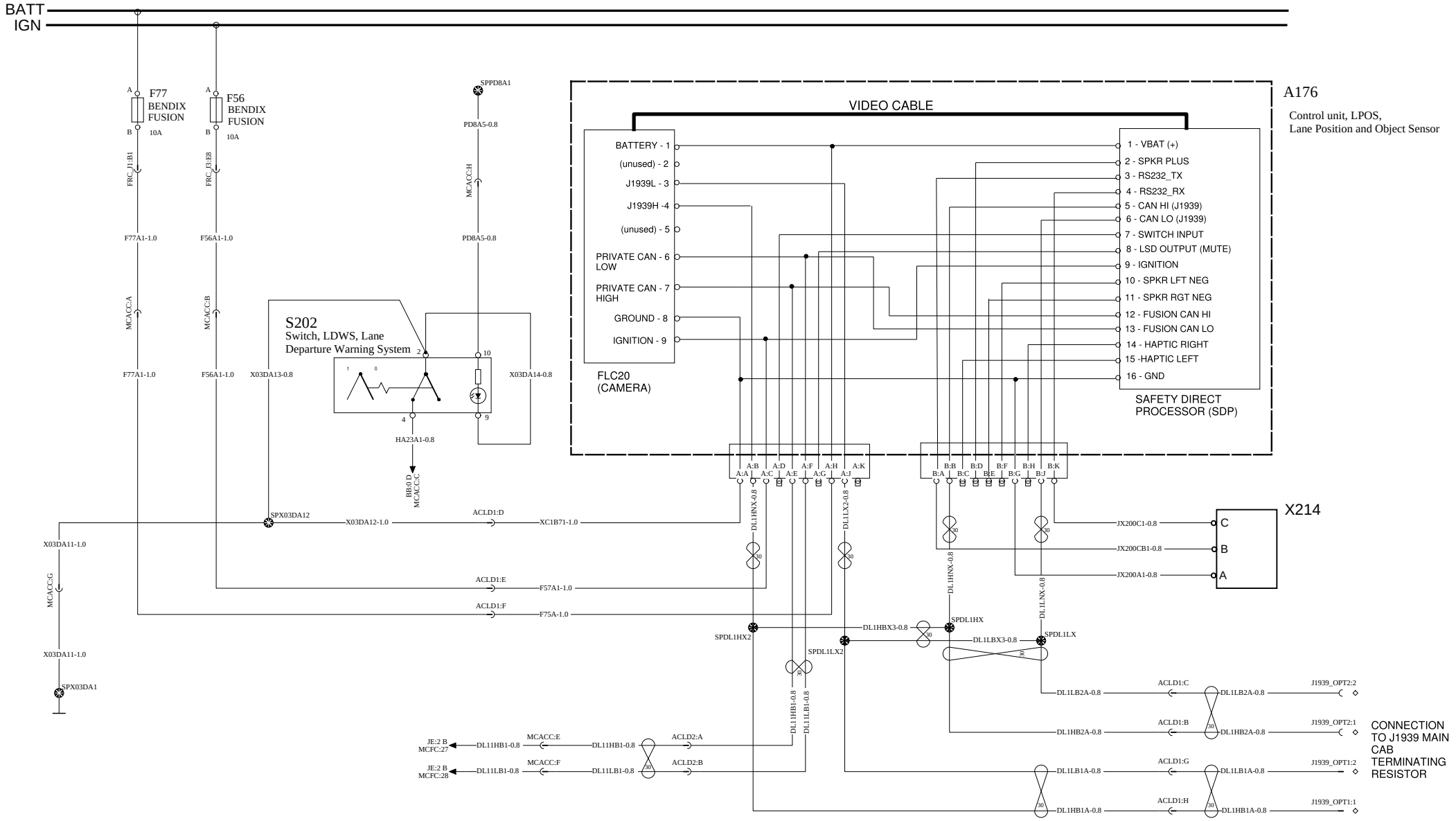

Volvo Truck Corporation	Document title WIRING DIAGRAM, 12V MACK CONVENTIONAL Document type PRODUCT SCHEMATIC	Document No 23970505	Issue 02	Volume 1 (1)	Page 84 (104)

LANE DEPARTURE WARNING - 70 " SLEEPER

WIRING DIAGRAM: JH

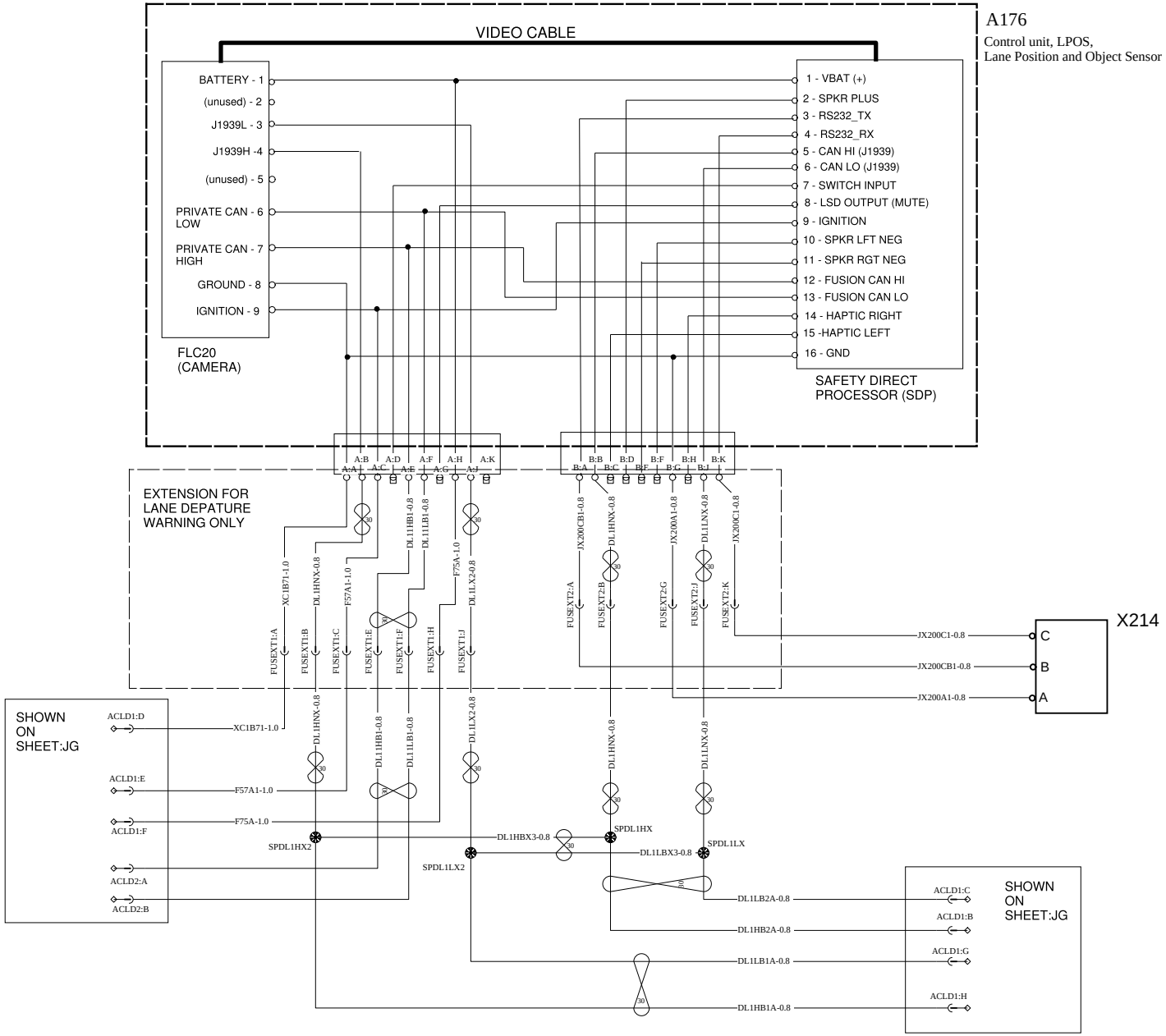

Volvo Truck Corporation	Document title WIRING DIAGRAM, 12V MACK CONVENTIONAL Document type PRODUCT SCHEMATIC	Document No 23970505	Issue 02	Volume 1 (1)	Page 85 (104)

AUDIO SYSTEM - DAYCAB

WIRING DIAGRAM: KA

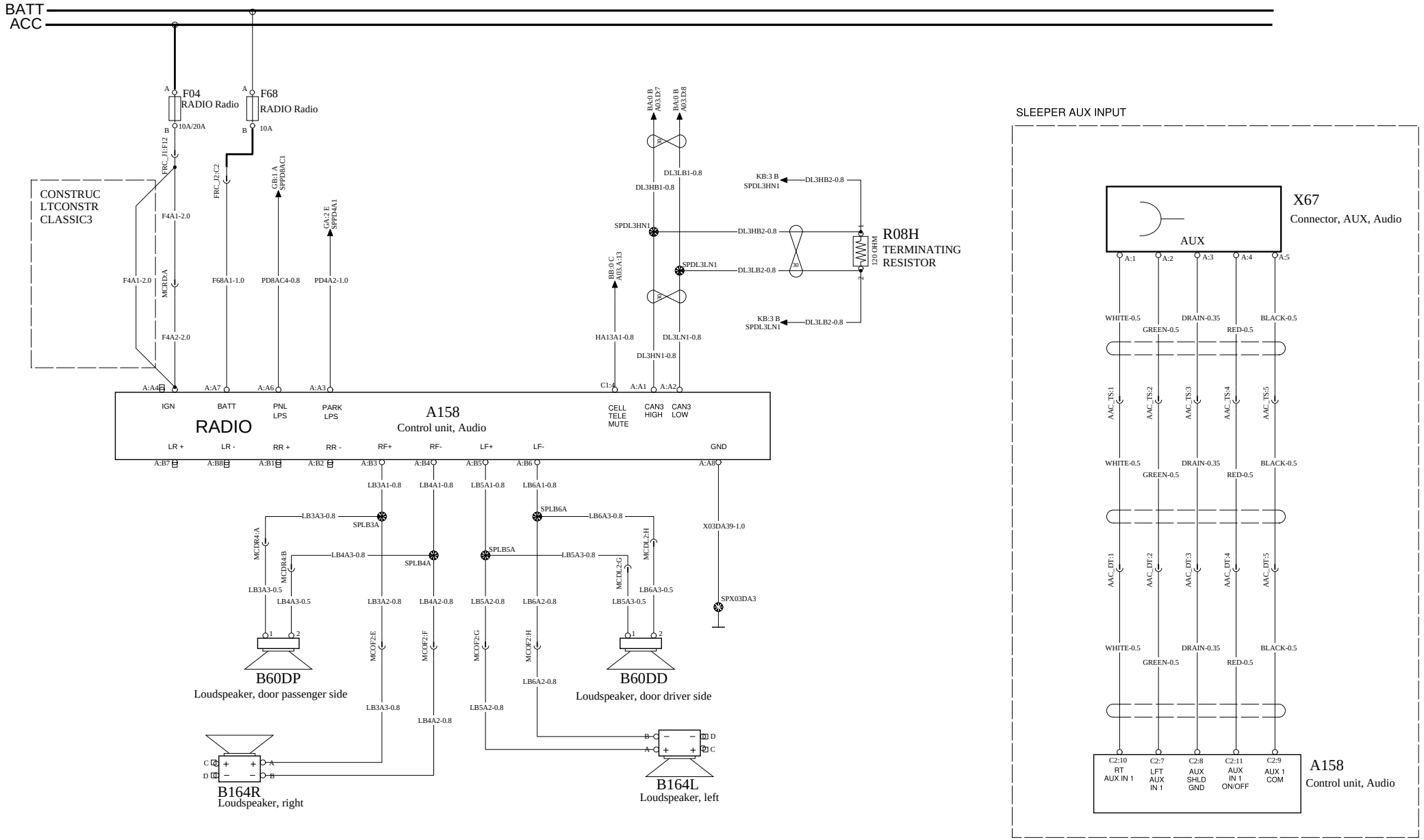

Volvo Truck Corporation	Document title: WIRING DIAGRAM, 12V MACK CONVENTIONAL Document type: PRODUCT SCHEMATIC	Document No: 23970505	Issue: 02	Volume: 1 (1)	Page: 86 (104)

AUDIO SYSTEM - SLEEPERS

WIRING DIAGRAM: KB

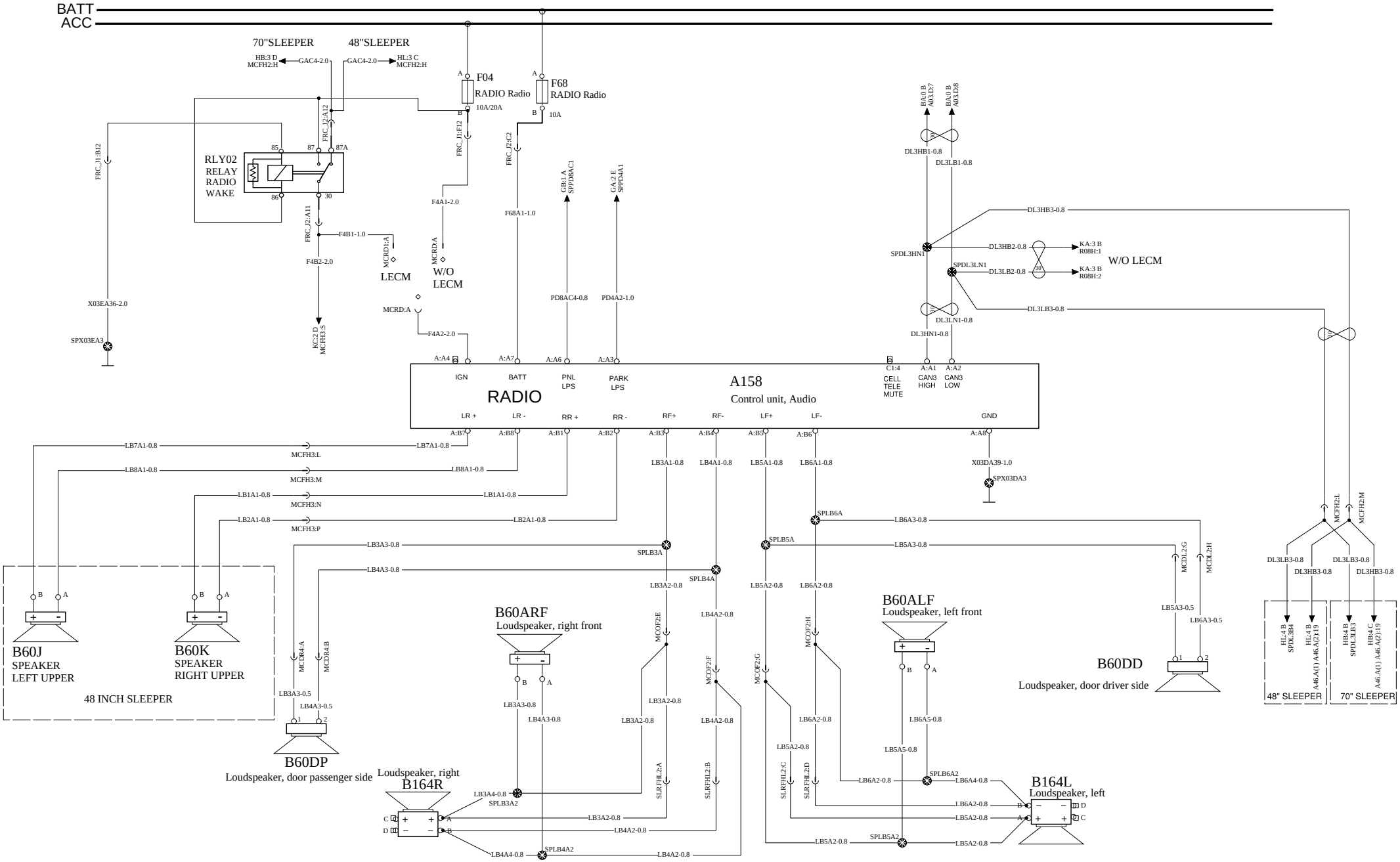

Volvo Truck Corporation	Document title WIRING DIAGRAM, 12V MACK CONVENTIONAL Document type PRODUCT SCHEMATIC	Document No 23970505	Issue 02	Volume 1 (1)	Page 87 (104)

AUDIO SYSTEM SPEAKER OUTPUTS W/ AMPLIFIER

WIRING DIAGRAM: KC

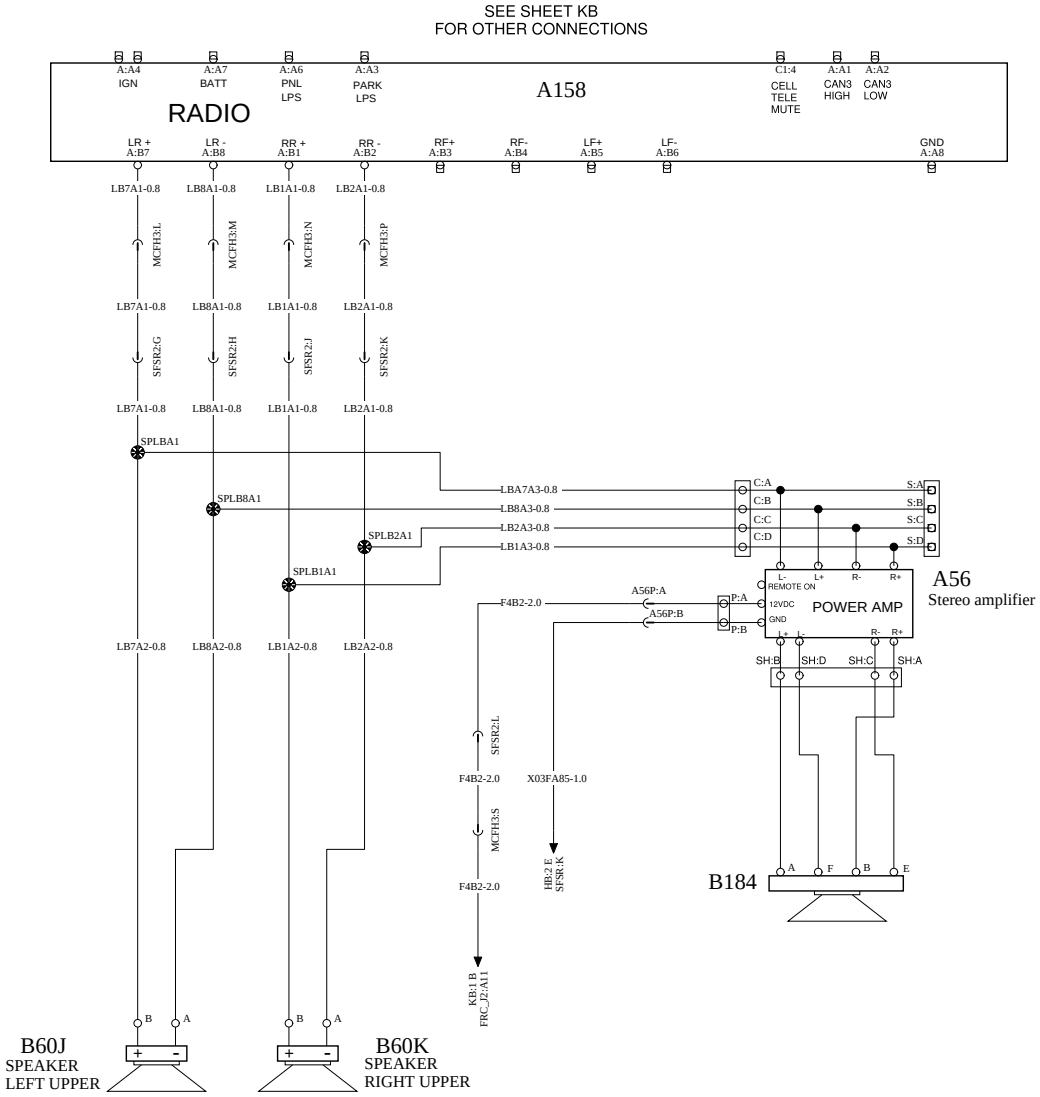

Volvo Truck Corporation	Document title WIRING DIAGRAM, 12V MACK CONVENTIONAL Document type PRODUCT SCHEMATIC	Document No 23970505	Issue 02	Volume 1 (1)	Page 88 (104)

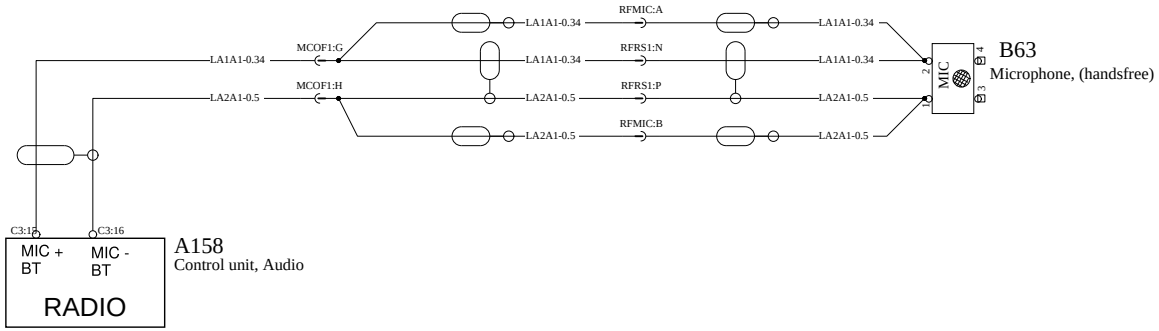
LA1A1-0.34
MCOF1:G
LA2A1-0.5
MCOF1:H
LA1A1-0.34
LA1A1-0.34
LA2A1-0.5
LA2A1-0.5
RFMIC:A
RFRS1:N
RFRS1:P
RFMIC:B
LA1A1-0.34
LA1A1-0.34
LA2A1-0.5
LA2A1-0.5
MIC
2
1
4
3
B63
Microphone, (handsfree)
C3:15
C3:16
MIC +
BT
MIC -
BT
RADIO
A158
Control unit, Audio

INFOTAINMENT AUDIO SYSTEM 1/2

WIRING DIAGRAM: KL

FOR CONNECTIONS TO MAIN CAB SEE AUDIO SYSTEM SCHEMATICS

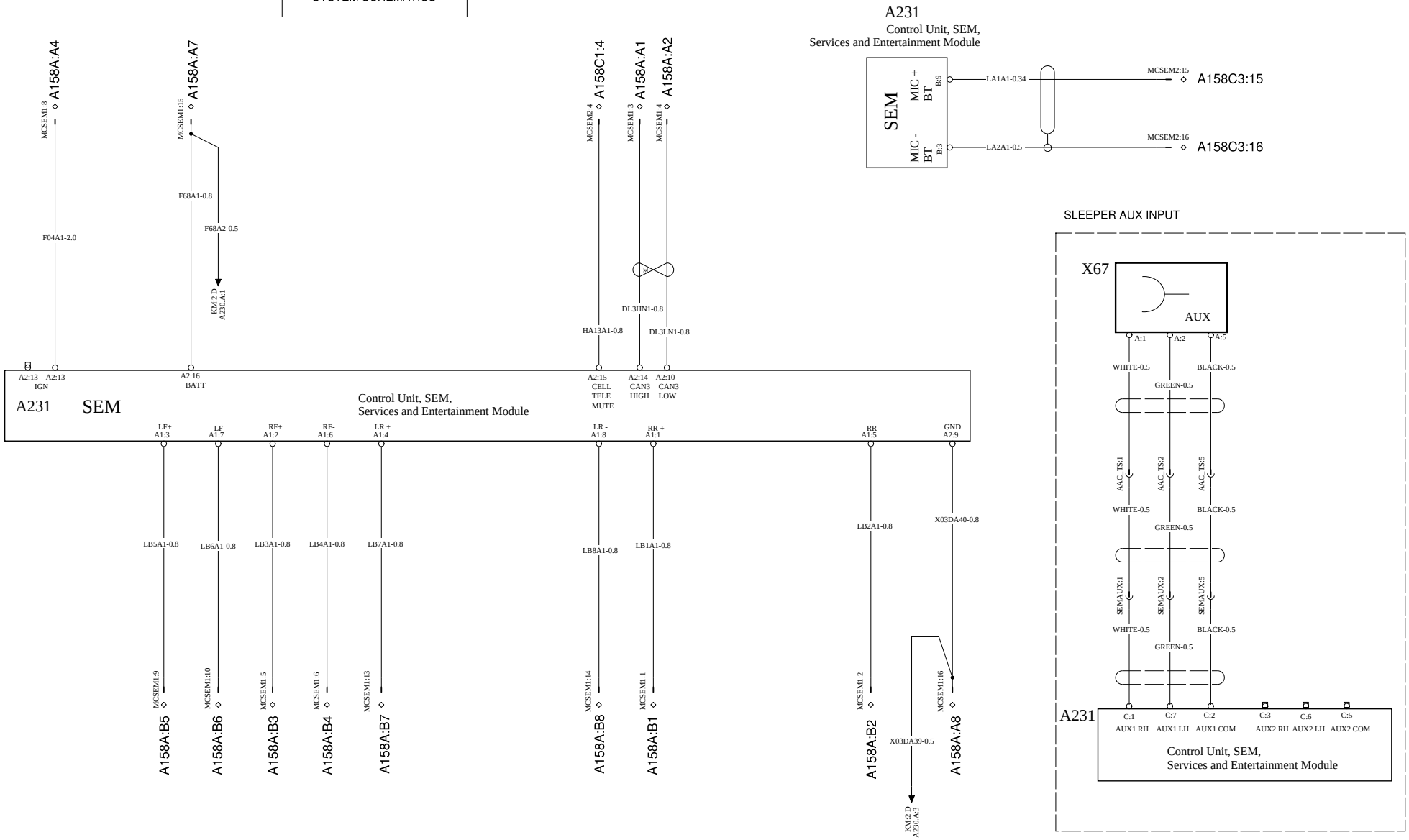

Volvo Truck Corporation	Document title WIRING DIAGRAM, 12V MACK CONVENTIONAL Document type PRODUCT SCHEMATIC	Document No 23970505	Issue 02	Volume 1 (1)	Page 90 (104)

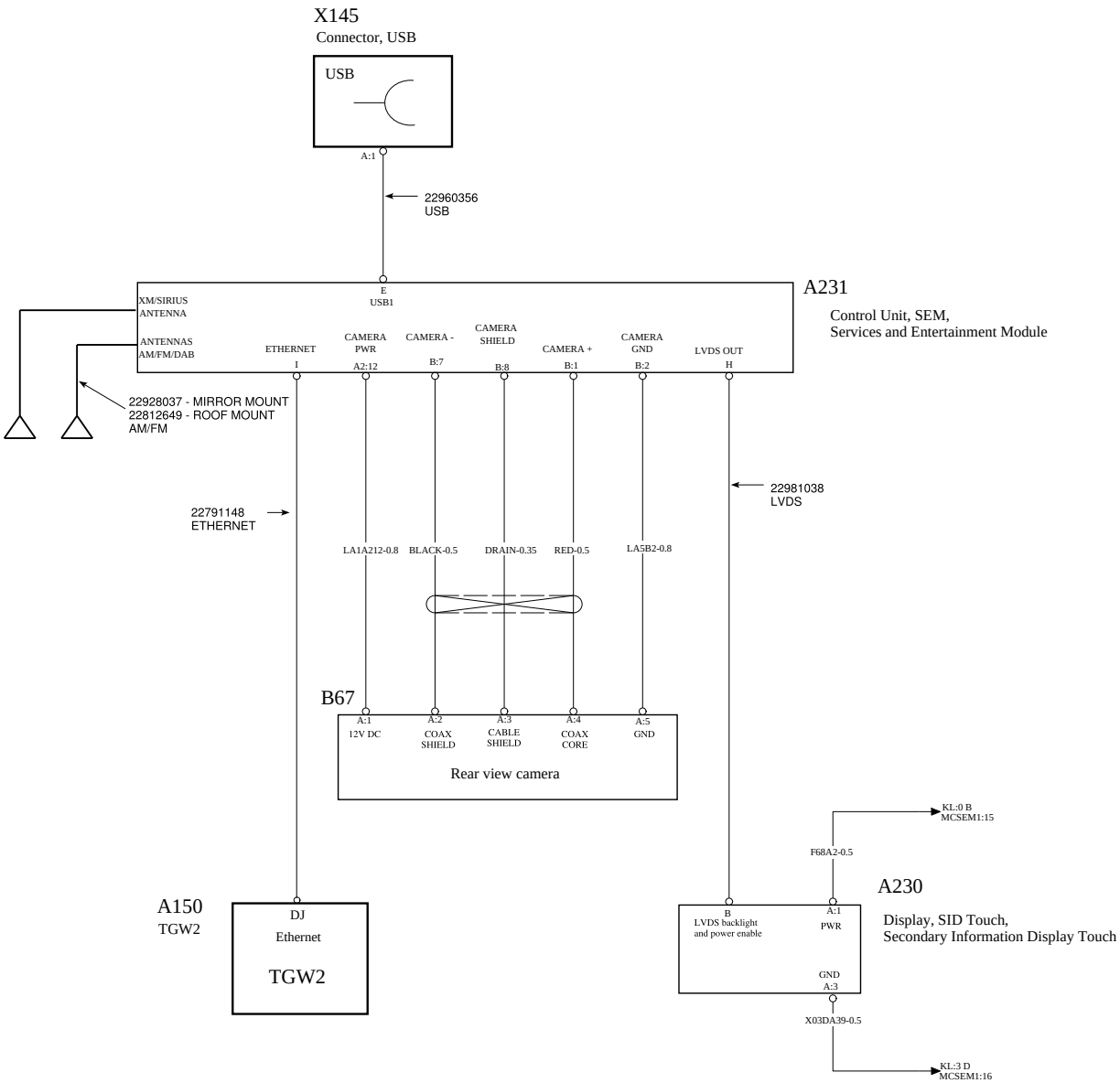

Volvo Truck Corporation	Document title WIRING DIAGRAM, 12V MACK CONVENTIONAL Document type PRODUCT SCHEMATIC	Document No 23970505	Issue 02	Volume 1 (1)	Page 91 (104)

TRAILER CABLE

WIRING DIAGRAM: MA

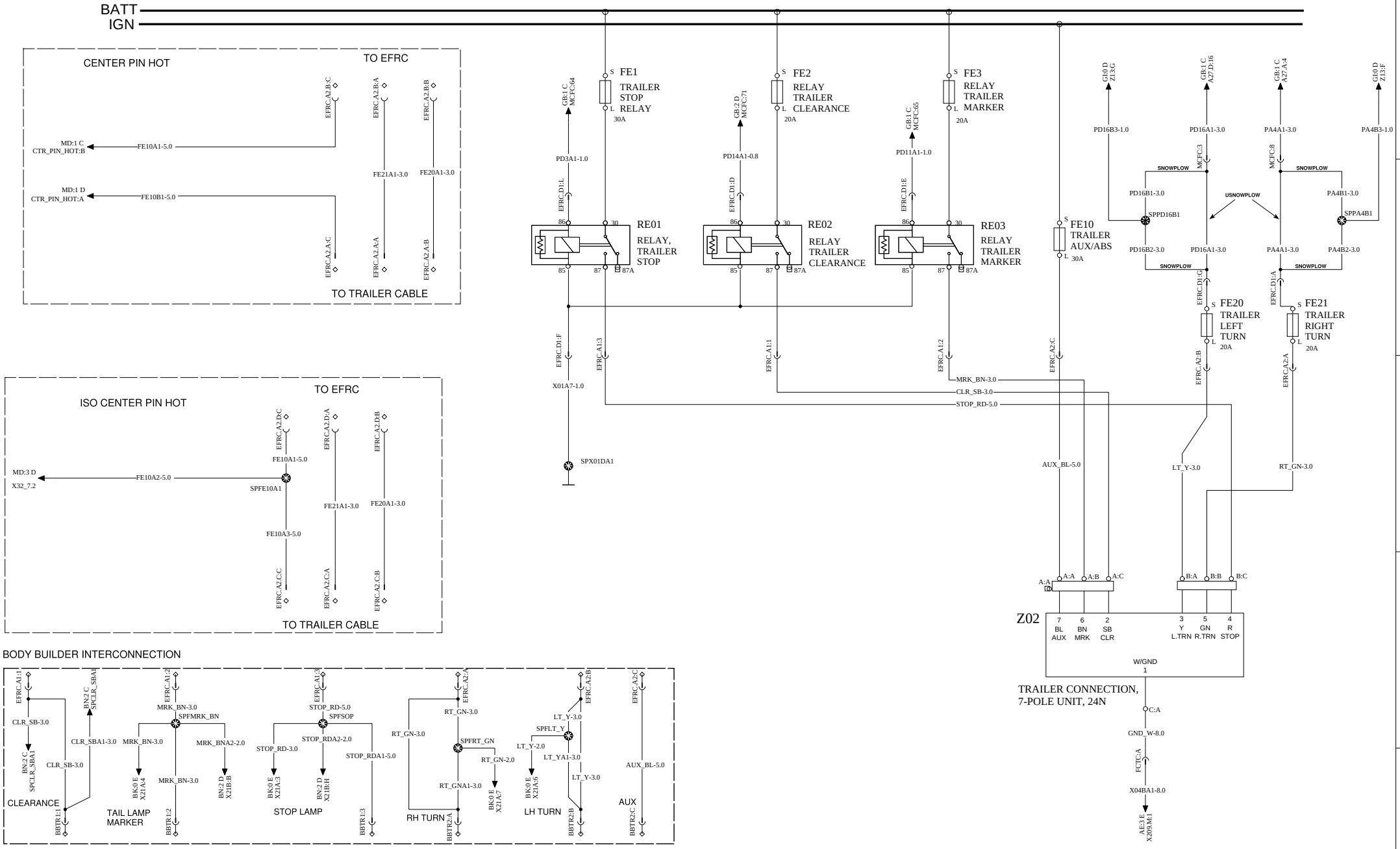

	Document title	Document No	Issue	Volume	Page
Volvo Truck Corporation	WIRING DIAGRAM, 12V MACK CONVENTIONAL Document type PRODUCT SCHEMATIC	23970505	02	1 (1)	92 (104)

TRAILER CABLE EXTENSION CABLE

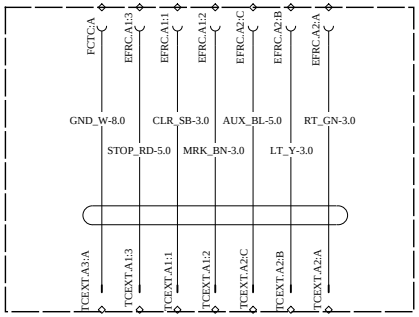

TRAILER CABLE EOF RECEPTACLE

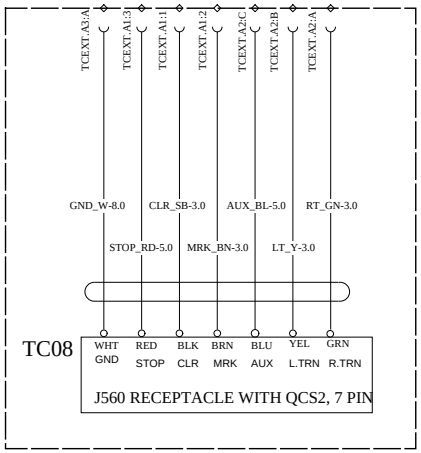

DETACHABLE TRAILER CABLES
STRAIGHT / COILED

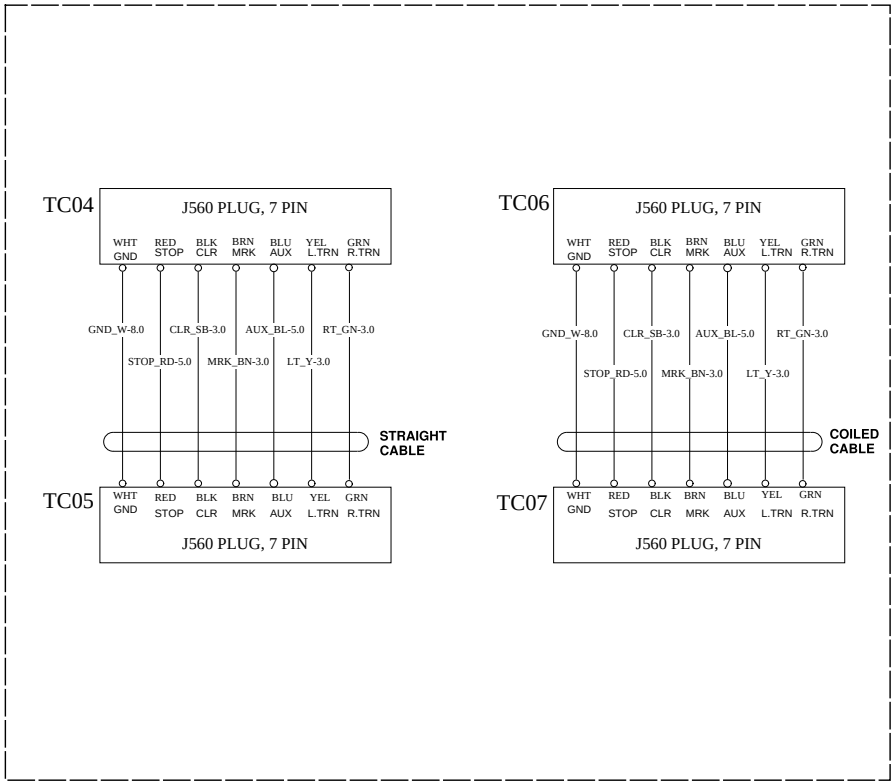

TRAILER CABLE BODY BUILDER
"Y" END OPTION

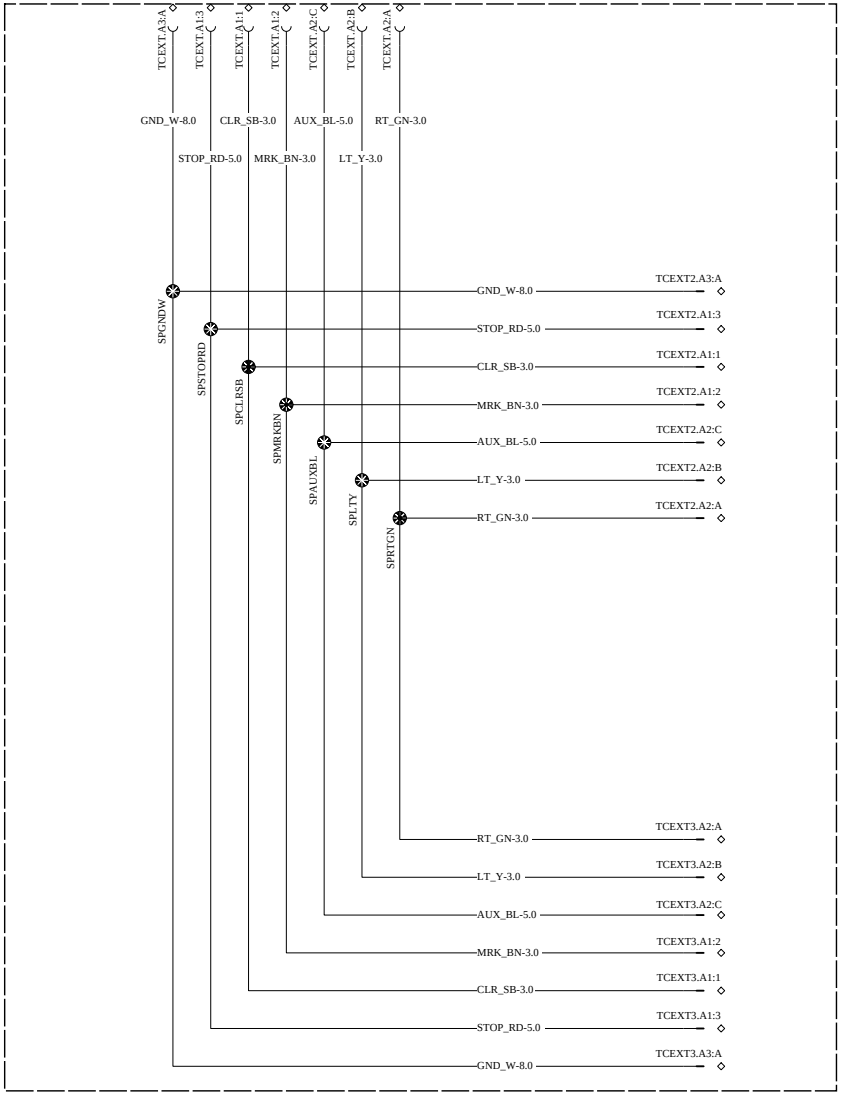

CENTER PIN HOT

WIRING DIAGRAM: MD

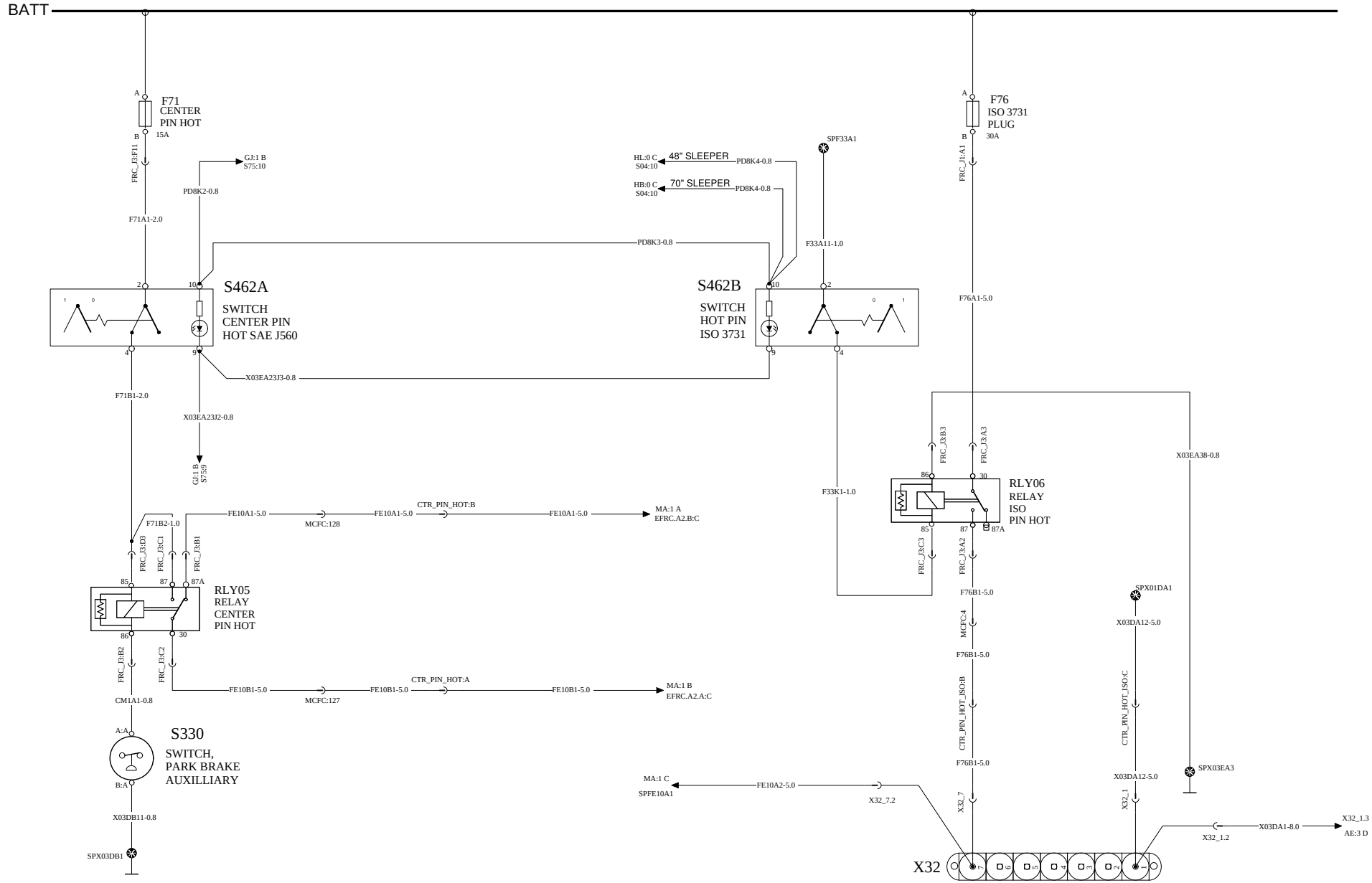

Volvo Truck Corporation	Document title WIRING DIAGRAM, 12V MACK CONVENTIONAL Document type PRODUCT SCHEMATIC	Document No 23970505	Issue 02	Volume 1 (1)	Page 95 (104)

SPARE SWITCHES AND AUXSW-6 OPTION

WIRING DIAGRAM: NA

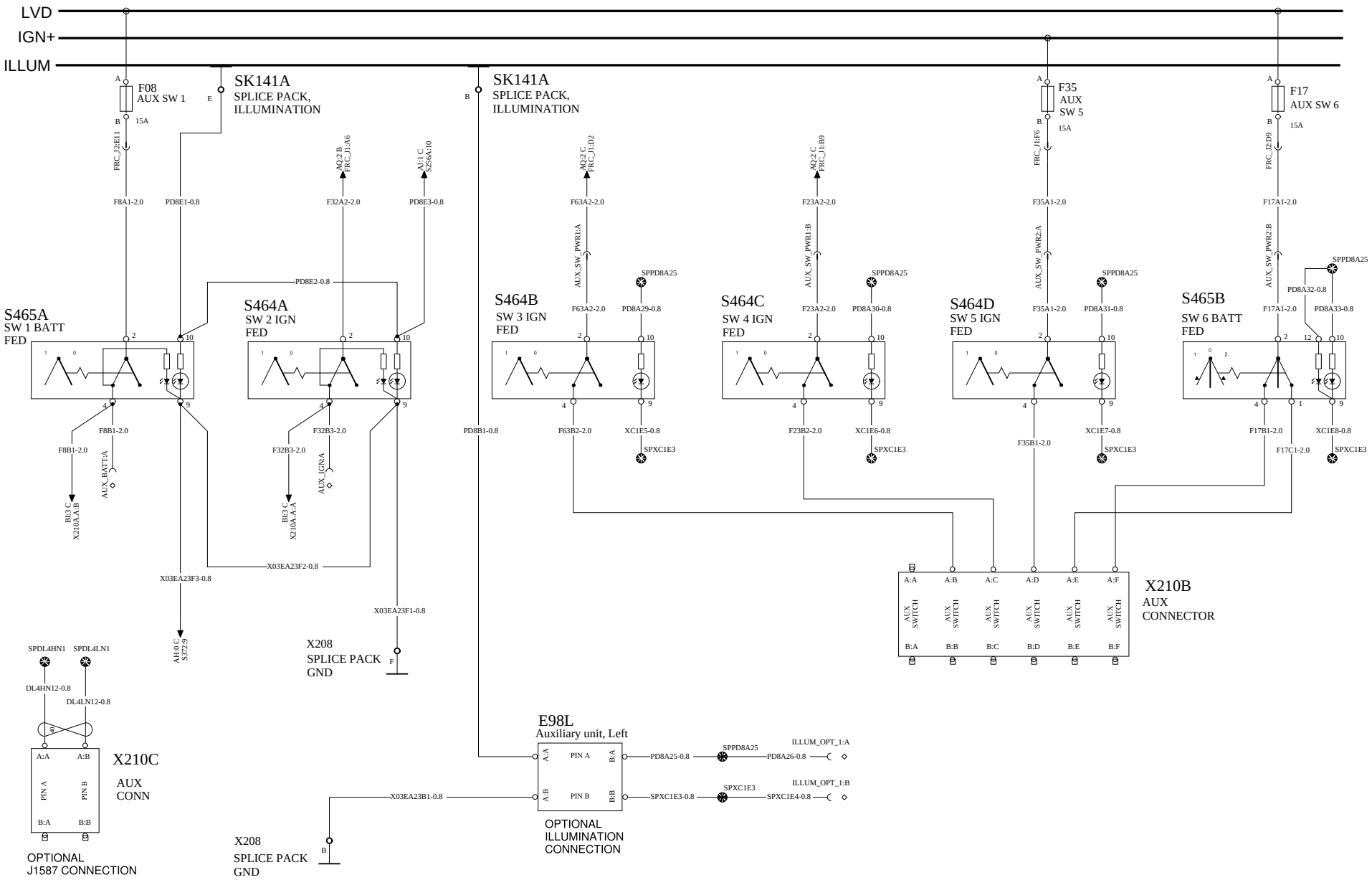

Volvo Truck Corporation	Document title WIRING DIAGRAM, 12V MACK CONVENTIONAL Document type PRODUCT SCHEMATIC	Document No 23970505	Issue 02	Volume 1 (1)	Page 96 (104)

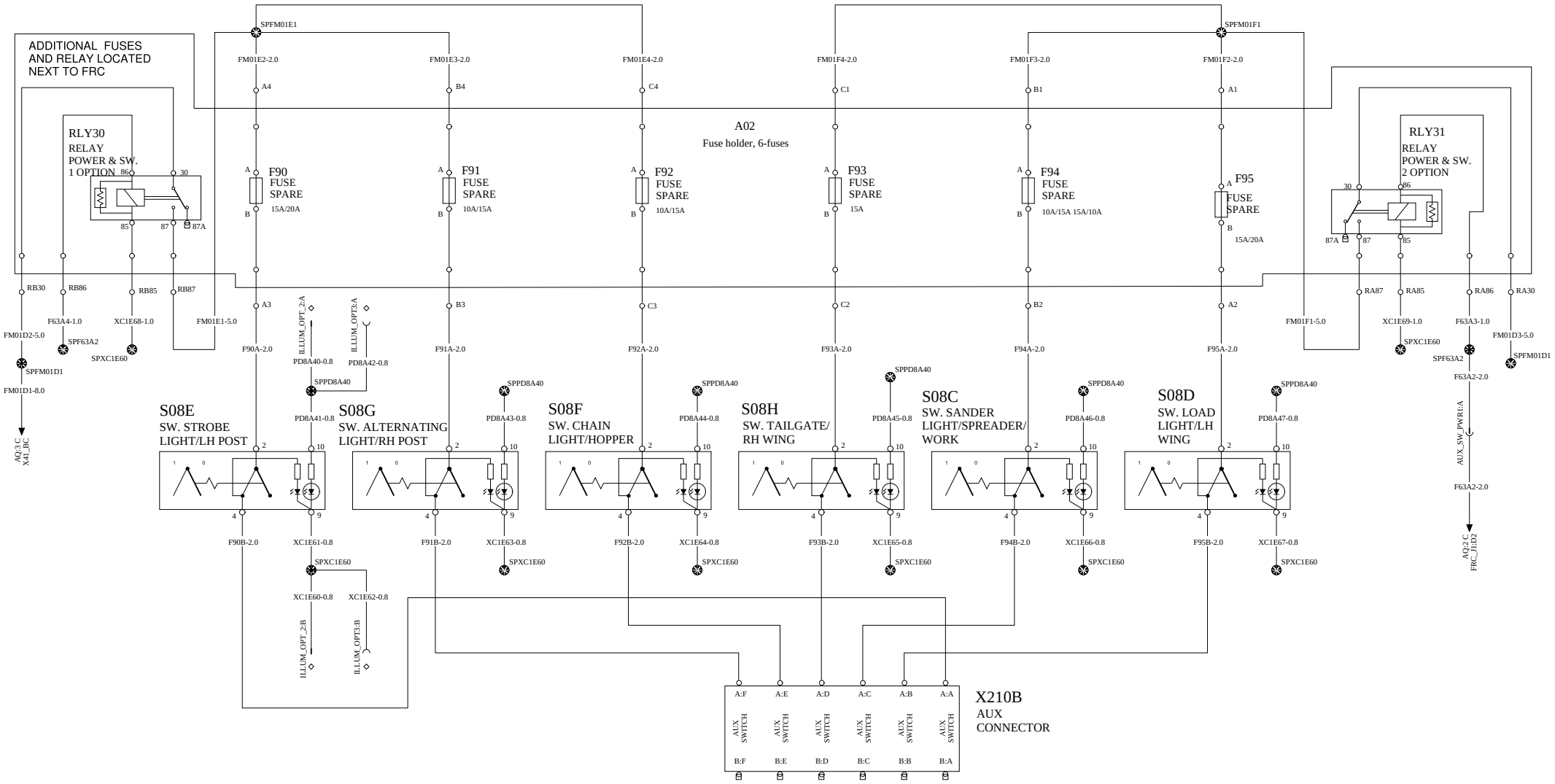

Volvo Truck Corporation	Document title WIRING DIAGRAM, 12V MACK CONVENTIONAL Document type PRODUCT SCHEMATIC	Document No 23970505	Issue 02	Volume 1 (1)	Page 97 (104)

SPARE SWITCHES - BBM-PK16

WIRING DIAGRAM: NC

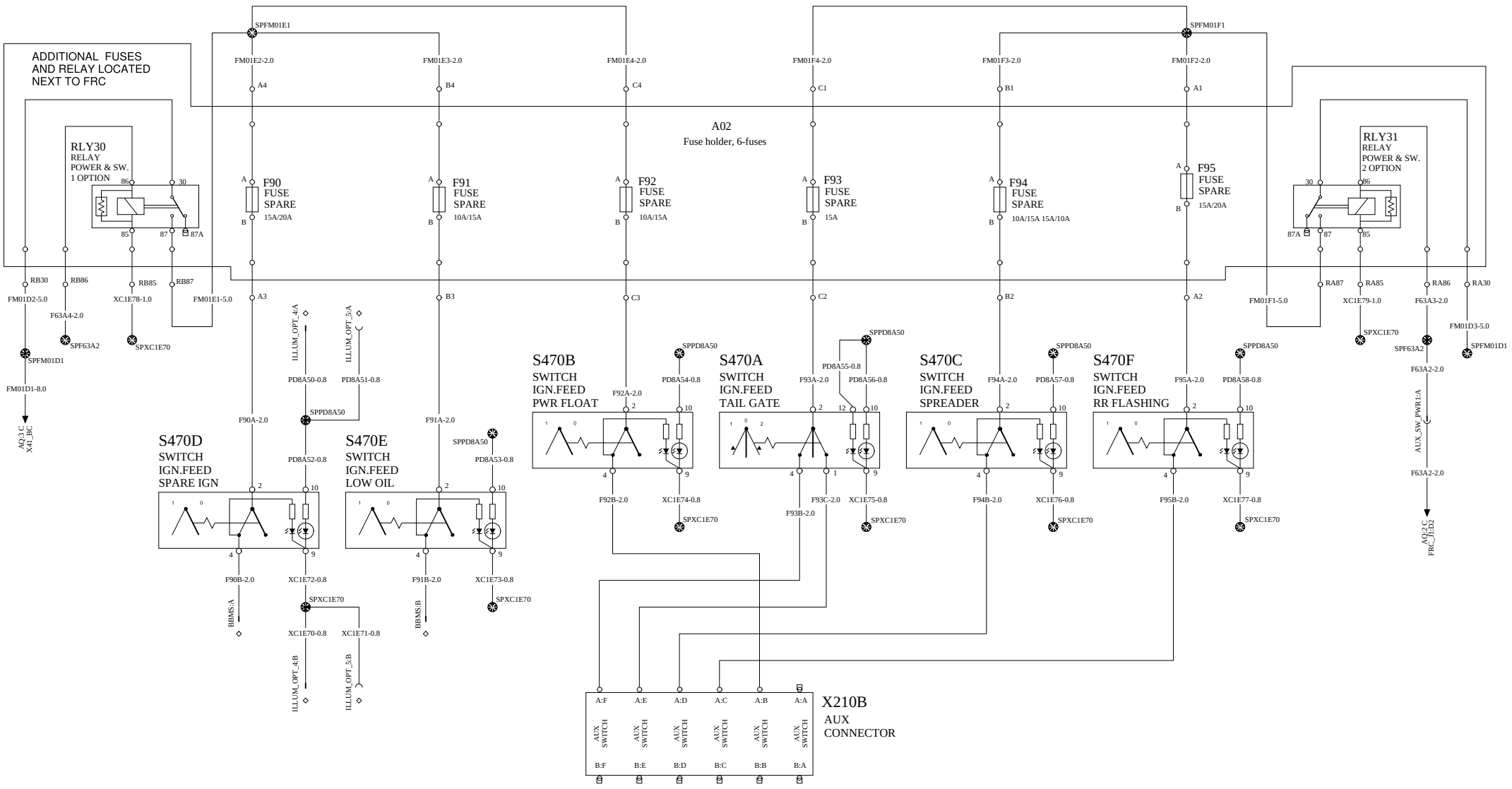

Volvo Truck Corporation	Document title: WIRING DIAGRAM, 12V MACK CONVENTIONAL Document type: PRODUCT SCHEMATIC	Document No: 23970505	Issue: 02	Volume: 1 (1)	Page: 98 (104)

TAILGATE LIFT POWER

WIRING DIAGRAM : ND

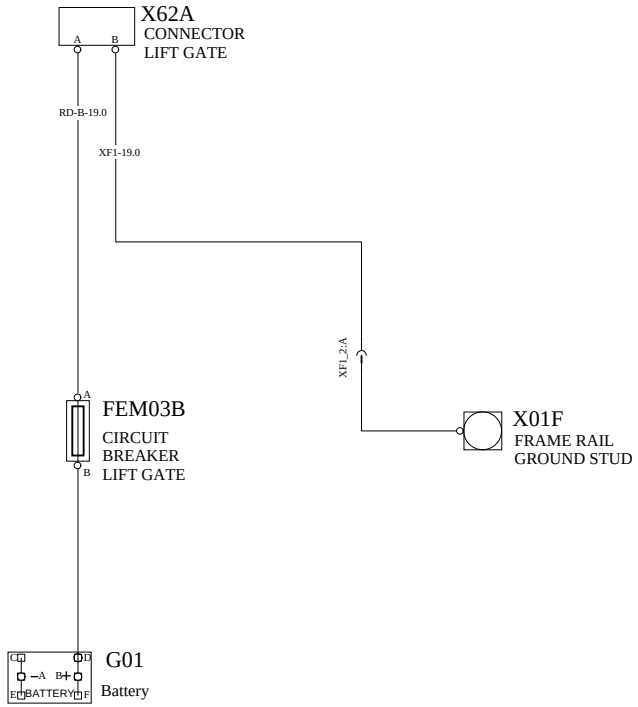

Volvo Truck Corporation	Document title WIRING DIAGRAM, 12V MACK CONVENTIONAL Document type PRODUCT SCHEMATIC	Document No 23970505	Issue 02	Volume 1 (1)	Page 99 (104)

DIAGNOSTICS 1/4 (DL4 - J1587 & DL2 - J2284)

WIRING DIAGRAM: XA

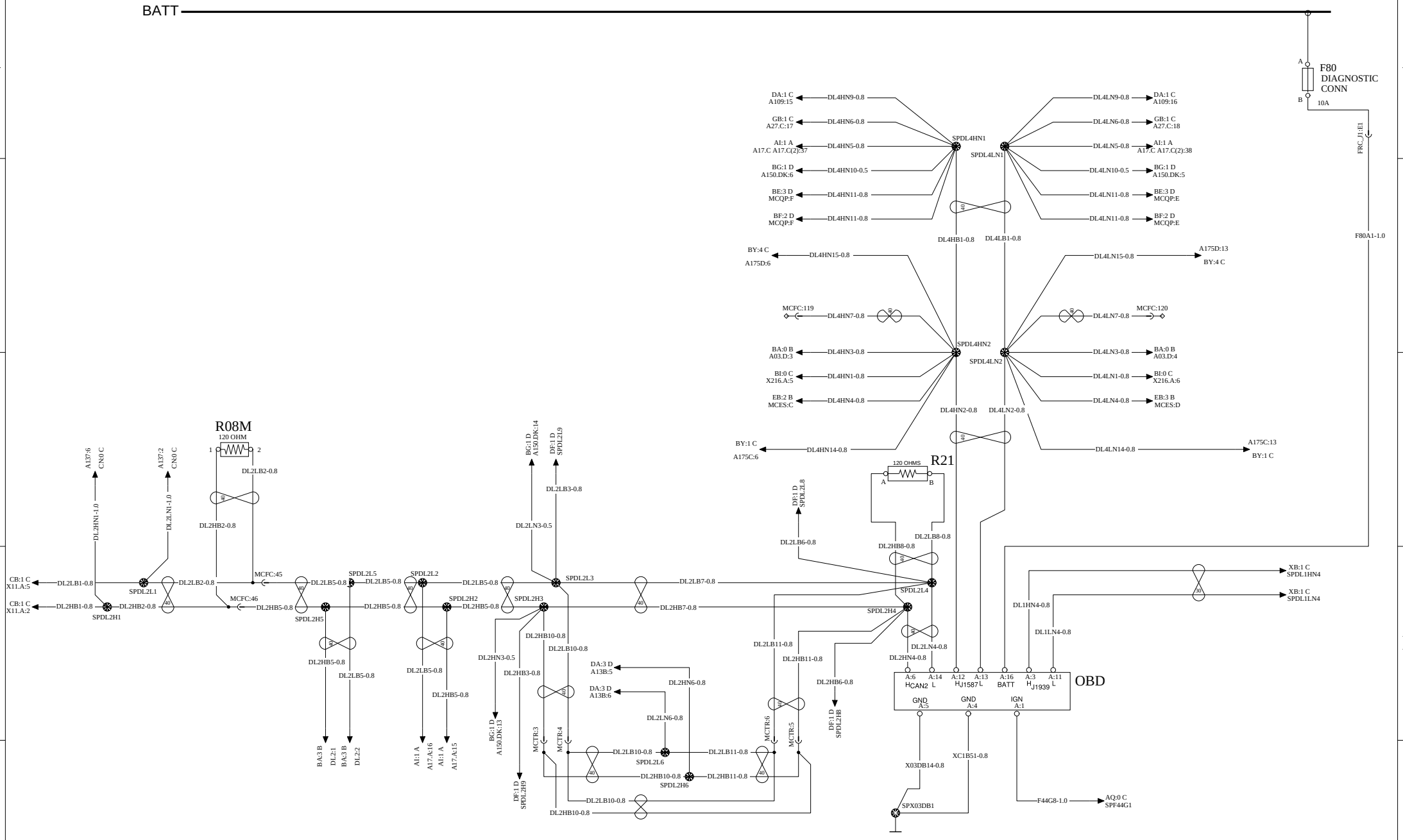

Volvo Truck Corporation	Document title WIRING DIAGRAM, 12V MACK CONVENTIONAL Document type PRODUCT SCHEMATIC	Document No 23970505	Issue 02	Volume 1 (1)	Page 100 (104)

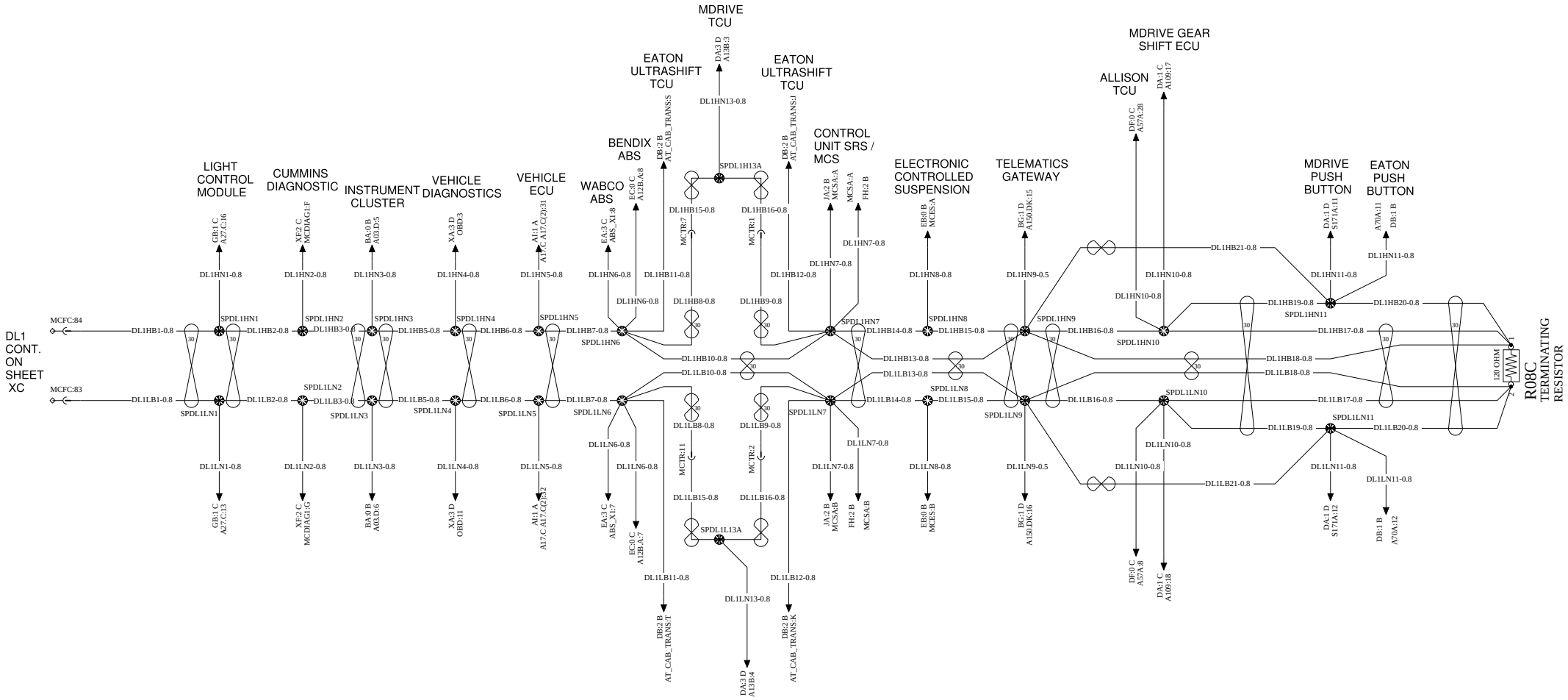

Volvo Truck Corporation	Document title: WIRING DIAGRAM, 12V MACK CONVENTIONAL Document type: PRODUCT SCHEMATIC	Document No: 23970505	Issue: 02	Volume: 1 (1)	Page: 101 (104)

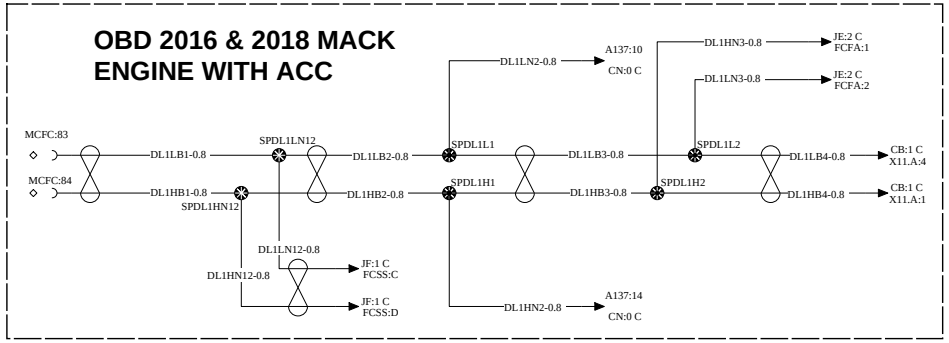

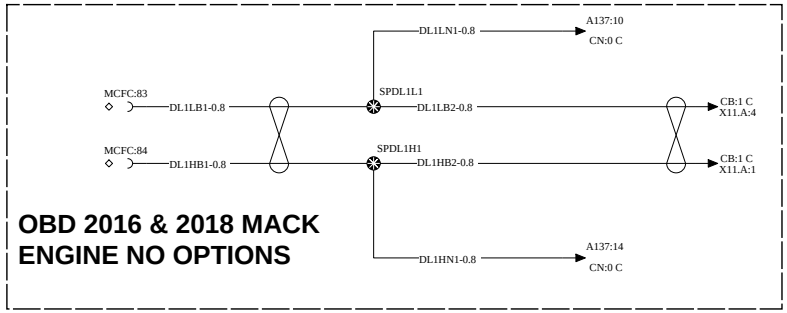

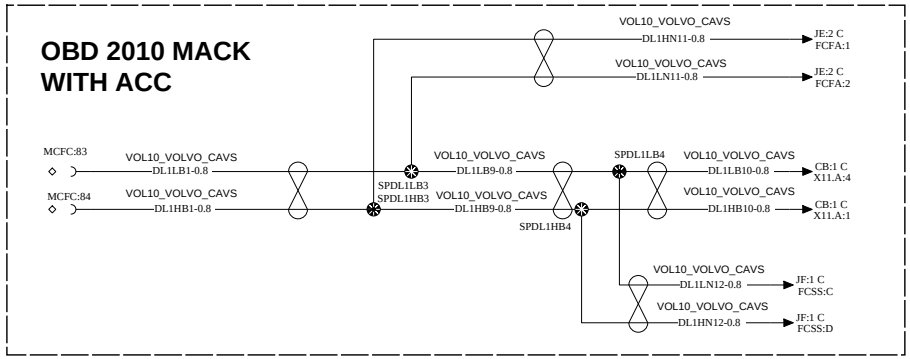

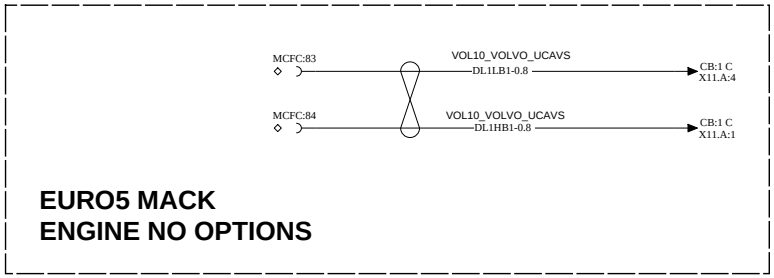

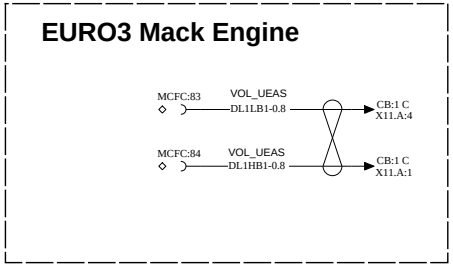

Volvo Truck Corporation	Document title WIRING DIAGRAM, 12V MACK CONVENTIONAL Document type PRODUCT SCHEMATIC	Document No 23970505	Issue 02	Volume 1 (1)	Page 102 (104)

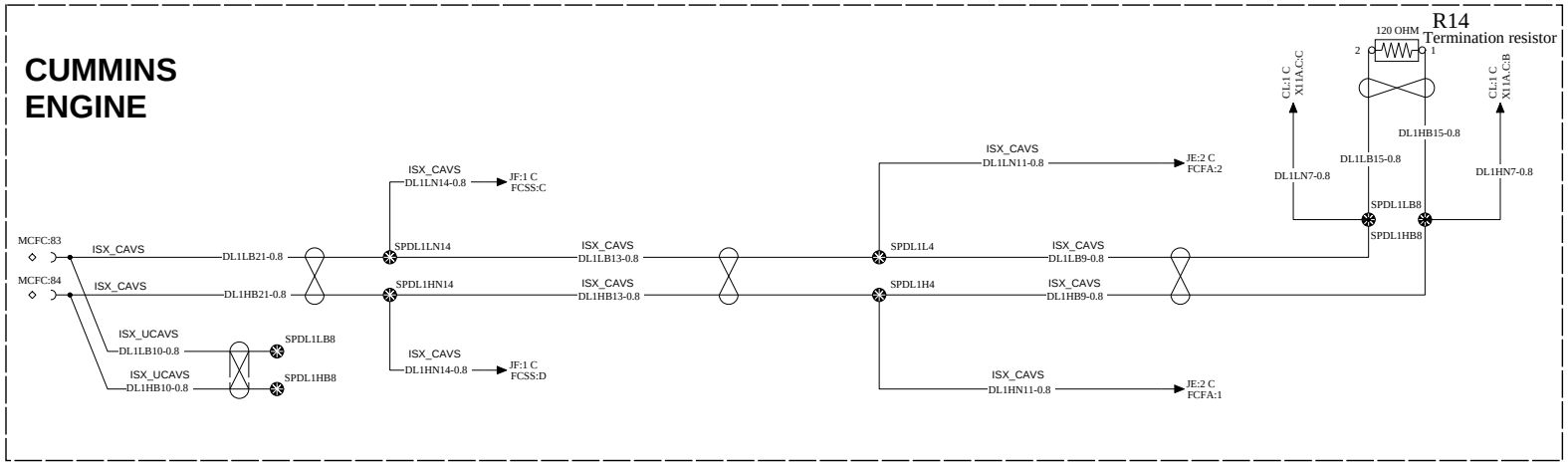

Volvo Truck Corporation	Document title WIRING DIAGRAM, 12V MACK CONVENTIONAL Document type PRODUCT SCHEMATIC	Document No 23970505	Issue 02	Volume 1 (1)	Page 103 (104)

WIRING DIAGRAM : XF

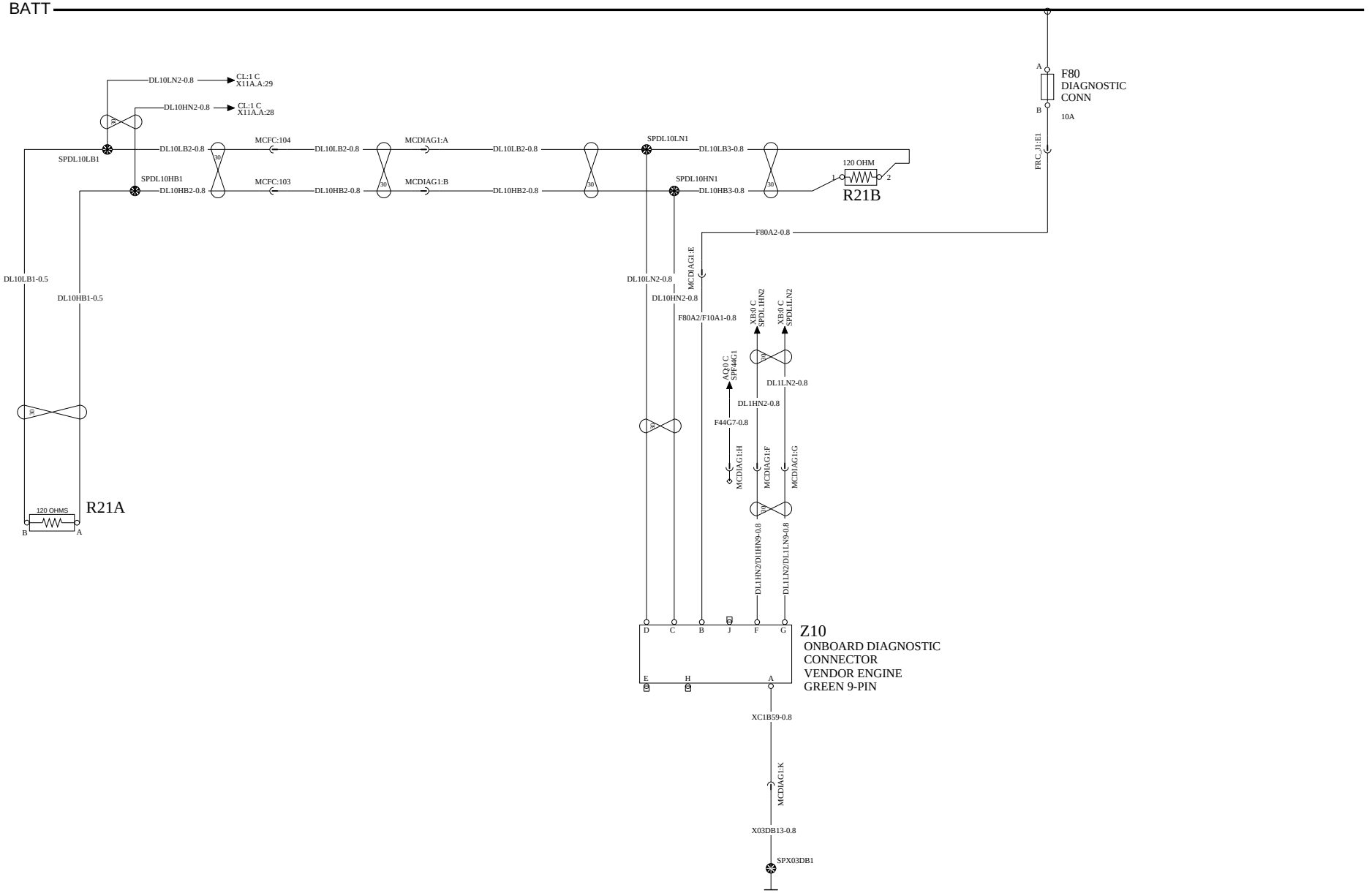

Volvo Truck Corporation	Document title WIRING DIAGRAM, 12V MACK CONVENTIONAL Document type PRODUCT SCHEMATIC	Document No 23970505	Issue 02	Volume 1 (1)	Page 104 (104)