BODY BUILDER INSTRUCTIONS

Mack Trucks

Body Builder General Information / Specifications
MD
Section 0

Introduction

The information in this document was developed to assist our customers throughout the body planning and installation process. This information will assist with the required specifications and guidelines for completion for your specific applications.

The information in this document does not include each and every unique situation that you may encounter when working on Mack vehicles. Mack Trucks cannot possibly know, evaluate, or advise someone on all the types of work that can be done on a Mack vehicle and all the appropriate ways to do such work. This includes all of the possible consequences of performing such work in a certain manner. Therefore, any situations or methods of working on a Mack vehicle that are not addressed in this document are not necessarily approved by Mack.

In the event that you require additional assistance, please contact Mack Body Builder Support at 877-770-7575.

Unless otherwise stated, following the recommendations listed in this document does not automatically guarantee compliance with applicable government regulations. Compliance with applicable government regulations is your responsibility as the party making the additions/modifications. Please be advised that the Mack Trucks vehicle warranty does not apply to any Mack vehicle that has been modified in any way, which in Mack's judgment might affect the vehicles stability or reliability. The information, specifications, and illustrations in this document are based on information that was current at the time of publication. Please note that illustrations are typical and may not reflect the exact arrangement of every component installed on a specific vehicle.

Please note that no part of this information may be reproduced, stored, or transmitted by any means without the express written permission of Mack Trucks, Inc.

Contents

- "Abbreviations, Emission Control System", page 3
- "Introduction – General Information", page 8
- "Conversion Chart", page 13
- "Safety Regulations and Standards General", page 16
- "Vehicle Certification", page 24
- "Vehicle Identification Number (VIN) Label", page 29

All Rights Reserved

- “Regulatory Labels”, page 31
- “Emissions Gaseous and Noise”, page 32
- “Body Installation General Precautions”, page 36
- “Precautions Modifications on Anti-Lock Brake Equipped Vehicles”, page 37
- “Hood Opening Angle and Height”, page 41
- “Vehicle Configuration Applications and Dimensions Conventional”, page 42
- “MMD Generation 1, 4x2 Dimensions/Configurations”, page 42
- “Back of Cab and Fuel Tank Dimensions Conventional ”, page 44
- “MMD Generation 2, 4x2 Dimensions/Configurations”, page 45
- “Back of Cab and Fuel Tank Dimensions Conventional”, page 47

Abbreviations, Emission Control System

Abbreviation	Description
AAT	Ambient Air Temperature
AFI	Aftertreatment Fuel Injector
AFR	Air Fuel Ratio
AP	Accelerator Pedal
APP	Accelerator Pedal Position
AR	Active Regeneration
A/T	Automatic Transmission
ATS	Aftertreatment System
AWL	Amber Warning Lamp
BARO	Barometric Pressure
BOC	Back of Cab
BPP	Brake Pedal Position
CAC	Charge Air Cooler
CAN	Controller of Area Network
CC	Cruise Control
CCB	Crankcase Breather
CCP	Crankcase Pressure
CCS	Coast Clutch Solenoid
CCV	Crankcase Ventilation
CDS	Custom Defined Statement (replaced by DCL)
CEGR	Cooled Exhaust Gas Recirculation
CKP	Crankshaft Position
CMP	Camshaft Position
CMVSS	Canada Motor Vehicle Safety Standards
CO	Carbon Monoxide
CTP	Closed Throttle Position
DCC	Diagnostic Connector, Cab
DCL	DataMax Control Language
DCU	Diagnostic Connector, Underhood
DEF	Diesel Exhaust Fluid
DFI	Direct Fuel Injection
DLC	Data Link Connector
DOC	Diesel Oxidation Catalyst
DPF	Diesel Particulate Filter
DRV	Discharge Recirculation Valve
DTC	Diagnostic Trouble Code

All Rights Reserved

Abbreviation	Description
DTM	Diagnostic Test Mode
EATS	Exhaust Aftertreatment System
EBP	Exhaust Back Pressure
ECC	Electronic Calibration Code
ECL	Engine Coolant Level
ECM	Engine Control Module
ECP	Engine Coolant Pressure
ECT	Engine Coolant Temperature
ECU	Electronic Control Unit
EECU	Engine Electronic Control Unit
EEPROM	Electronically Erasable Programmable Read Only Memory
EFC	Electronic Fuel Control
EFT	Engine Fuel Temperature
EGR	Exhaust Gas Recirculation
EGT	Exhaust Gas Temperature
EHT	Electronic Hand Throttle
EMS	Engine Management System
EO	Engine Overspeed
EOL	Engine Oil Level
EOP	Engine Oil Pressure
EOT	Engine Oil Temperature
ESC	Engine Speed Control
EPROM	Erasable Programmable Read Only Memory
ETA	Engine Timing Actuator
EUI	Electronic Unit Injector
FC	Fan Control
FCC	Fan Control Circuit
FDA	Fuel Drain Actuator
FI	Fuel Injection
FL	Fuel Lift
FMI	Failure Mode Identification
FMVSS	Federal Motor Vehicle Safety Standards
FP	Fuel Pump
FS	Fuel Shutoff
FT	Fuel Trim
GMF	Gas Mass Flow
GMT	Greenwich Mean Time

All Rights Reserved

Abbreviation	Description
GND	Ground
HC	Hydrocarbons
HEST	High Exhaust System Temperature
HI	High Idle
HIG	High Idle Governor
IA	Intake Air
IAH	Intake Air Heater
IAP	Injection Actuation Pressure
IAT	Intake Air Temperature
ICP	Injection Control Pressure
ID	Identification Data
IFI	Indirect Fuel Injection
IFP	Injection Fuel Pressure
II	Idle Increment
I/M	Inspection and Maintenance
IMP	Intake Manifold Pressure
IMS	Idle Management System
INJ	Injector
ISC	Idle Speed Control
IV	Idle Validation
MAF	Mass Air Flow
MAP	Manifold Absolute Pressure
MID	Message Identifier (J1587 source)
MIL	Malfunction Indicator Lamp
NCV	Needle Control Valve
NOP	Needle Opening Pressure
NOx	Nitrogen Oxide
NSCS	National Safety Code Standard
OBD	On Board Diagnostic
OSS	Output Shaft Speed
PC	Pressure Control
PGN	Parameter Group Number (J1939 message ID)
PID	Parameter Identification
PID	Parameter Identification (J1587) PTO Power Take–off
PID	Product Identification (order code)
PL	Protect Lamp
PM	Particulate Matter

All Rights Reserved

Abbreviation	Description
PNP	Park/Neutral Position
PR	Passive Regeneration
PROM	Programmable Read Only Memory
PTO	Power Take-off
PTT	Premium Tech Tool
PTT2	Premium Tech Tool 2 SA Source Address (J1939 unit identifier)
PW	Pulse Width
PWM	Pulse Width Modulation
RAM	Random Access Memory
RFP	Rail Fuel Pressure
ROM	Read Only Memory
RPM	Revolutions Per Minute
RSL	Red Stop Lamp
SCR	Selective Catalytic Reduction
SID	Subsystem Identification (J1587)
SFP	Supply Fuel Pressure
SFT	Supply Fuel Temperature
SOV	Shut-off valve
SP	Spill Valve
SPN	Suspect Parameter Number (J1939 parameter)
SRA	Smart Remote Actuator
SRT	System Readiness Test
SS	Shift Solenoid
SSC	Single Speed Control
ST	Scan Tool
TCC	Torque Converter Clutch
TCM	Transmission Control Module
TDC	Top Dead Center
TR	Transmission Range
TSS	Turbine Shaft Speed
TWC	Three Way Catalyst
UHFP	Ultra High Fuel injection Pressure
ULSD	Ultra Low Sulfur Diesel
VAF	Volume Air Flow
VBOC	Vertical Back of Cab
VCADS	Vehicle Computer-Aided Diagnostic System
VDA	Vehicle Data Administration (OEM database)

All Rights Reserved

Abbreviation	Description
VECU	Vehicle Electronic Control Unit
VGT	Variable Geometry Turbocharger
VLS	Vehicle Limiting Speed
VREF	Voltage Reference
VSG	Variable Speed Governor
VSS	Vehicle Speed Sensor
WCC	Wastegate Control Circuit

Notes

All Rights Reserved

Introduction – General Information

Safety Information

Advisory Labels

Cautionary *signal words* (Danger-Warning-Caution) may appear in various locations throughout this manual. Information accented by one of these signal words must be observed to minimize the risk of personal injury to service personnel, or the possibility of improper service methods, which may damage the vehicle or cause it to be unsafe. Additional Notes and Service Hints are used to emphasize areas of procedural importance and provide suggestions for ease of repair. The following definitions indicate the use of these advisory labels as they appear throughout the manual:

⚠ DANGER

Danger indicates an unsafe practice that could result in death or serious personal injury. Serious personal injury is considered to be permanent injury from which full recovery is NOT expected, resulting in a change in life style.

⚠ WARNING

Warning indicates an unsafe practice that could result in personal injury. Personal injury means that the injury is of a temporary nature and that full recovery is expected.

⚠ CAUTION

Caution indicates an unsafe practice that could result in damage to the product.

Note: Note indicates a procedure, practice, or condition that must be followed in order for the vehicle or component to function in the manner intended.

Note: A helpful suggestion that will make it quicker and/or easier to perform a procedure, while possibly reducing service cost.

Notes

All Rights Reserved

Service Procedures and Tool Usage

Anyone using a service procedure or tool not recommended in this manual must first satisfy themselves thoroughly that neither their safety nor vehicle safety will be jeopardized by the service method they select. Individuals deviating in any manner from the instructions provided assume all risks of consequential personal injury or damage to equipment involved.

Also note that particular service procedures may require the use of a special tool(s) designed for a specific purpose. These special tools must be used in the manner described, whenever specified in the instructions.

1 Before starting a vehicle, always be seated in the driver's seat, press the brake pedal, place the transmission in neutral, and apply the parking brakes. Failure to follow these instructions could produce unexpected vehicle movement, which can result in serious personal injury or death.

2 Before working on a vehicle, place the transmission in neutral, set the parking brakes, and block the wheels. Failure to follow these instructions could produce unexpected vehicle movement, which can result in serious personal injury or death.

⚠ DANGER

Engine-driven components such as power take-off (PTO) units, fans and fan belts, drive shafts and other related rotating assemblies, can be very dangerous. Do not work on or service engine-driven components unless the engine is shut down. Always keep body parts and loose clothing out of range of these powerful components to prevent serious personal injury. Be aware of PTO engagement or nonengagement status. Always disengage the PTO when not in use.

⚠ DANGER

Do not work under a vehicle that is supported only by a hydraulic jack. The hydraulic jack could fail suddenly and unexpectedly, resulting in severe personal injury or death. Always use jack stands of adequate capacity to support the weight of the vehicle.

⚠ CAUTION

Before towing the vehicle, place the transmission in neutral and lift the rear wheels off the ground, or disconnect the driveline to avoid damage to the transmission during towing.

Notes

All Rights Reserved

REMEMBER, SAFETY . . . IS NO ACCIDENT!

Mack Trucks, Inc. cannot anticipate every possible occurrence that may involve a potential hazard. Accidents can be avoided by recognizing potentially hazardous situations and taking necessary precautions. Performing service procedures correctly is critical to technician safety and safe, reliable vehicle operation.

The following list of general shop safety practices can help technicians avoid potentially hazardous situations and reduce the risk of personal injury. DO NOT perform any services, maintenance procedures or lubrications until this manual has been read and understood.

- Perform all service work on a flat, level surface. Block wheels to prevent vehicle from rolling.
- DO NOT wear loose-fitting or torn clothing. Remove any jewelry before servicing vehicle.
- ALWAYS wear safety glasses and protective shoes. Avoid injury by being aware of sharp corners and jagged edges.
- Use hoists or jacks to lift or move heavy objects.
- NEVER run engine indoors unless exhaust fumes are adequately vented to the outside.
- Be aware of hot surfaces. Allow engine to cool sufficiently before performing any service or tests in the vicinity of the engine.
- Keep work area clean and orderly. Clean up any spilled oil, grease, fuel, hydraulic fluid, etc.
- Only use tools that are in good condition, and always use accurately calibrated torque wrenches to tighten all fasteners to specified torques. In instances where procedures require the use of special tools, which are designed for a specific purpose, use only in the manner described in the instructions.
- Do not store natural gas powered vehicles indoors for an extended period of time (overnight) without first removing the fuel.
- Never smoke around a natural gas powered vehicle.

Notes

All Rights Reserved

General Information

Introduction

Properly mounting the body structure or any other type of equipment to a chassis is essential to ensure that both static and dynamic forces are transmitted freely without producing excessive localized loads that may eventually result in damage to the vehicle, or adversely affect vehicle handling characteristics and operation. This guide outlines Mack Trucks, Inc. recommendations for use by body builders when adding equipment to a MACK chassis. In addition to any precautions that must be taken when physically mounting equipment to the frame, precautions must also be taken when connecting accessory components to the vehicle electrical and air systems so that the systems continue to perform as originally intended.

MACK chassis may be used in various applications, such as platform trucks, dump trucks, vans and refuse operations. When selecting a chassis for a particular application, make sure to select the proper chassis specifications. When installed, the weight of the body and intended payload must not exceed the chassis gross vehicle weight rating (GVWR) and gross axle weight ratings (GAWRs). Likewise, the weight of the body and the intended payload must not cause excessive frame rail deflection. Also, when selecting an engine, select the proper horsepower rating to ensure adequate performance and fuel economy.

Service Support

The following resources are available to the body builder when questions or situations arise that are not covered in this manual.

Service Publications MACK

Various service publications, such as component overhaul manuals, air and brake system manuals (includes air piping diagrams), electrical systems diagrams, diagnostic and programming manuals, are available through the service publications department. Service literature must be ordered from an authorized MACK dealership. Service information is also available on-line by logging on to the Mack Trucks, Inc. website at www.macktrucks.com.

Note: Visit www.cummins.com for information regarding Cummins engines.

Note: Visit www.allisontransmission.com for information regarding Allison transmissions.

Sales Engineering MACK

For information concerning vehicle applications, configurations, specifications, etc., contact Mack Trucks, Inc. Sales Engineering at 1-800-TNT-MACK.

Body Builder Support Mack Trucks

For technical assistance, contact Body Builder Support at 877–770–7575.

Information Resources Non-MACK

National Truck Equipment Association (NTEA)

The NTEA has a reference book, Truck Equipment Handbook, available. This handbook includes such information as formulas necessary for matching chassis and bodies, center of gravity calculations, weights of commodities, as well as basic engineering calculations, component descriptions, application and installation considerations. For additional information, visit the NTEA website at www.ntea.com, or call 1-800-441-NTEA.

Canadian Truck Equipment Association (CTEA)

Like the NTEA, the CTEA also offers useful publications for the body installer. For information, call 519-631-0414.

All Rights Reserved

Waste Equipment Technology Association (WASTEC)

The WASTEC offers ANSI/Z245.1-2007, mobile wastes and recyclable materials collection, transportation and compaction equipment safety requirements. For information, call 1-800-424-2869.

Regulatory Agencies Websites

The following regulatory agency websites may be a source for useful and helpful information.

- **National Highway Traffic Safety Administration (NHTSA)** www.nhtsa.dot.gov
- **Federal Motor Carrier Safety Administration (FMCSA)** www.fmcsa.dot.gov
- **Federal Highway Administration (FHWA)** www.fhwa.dot.gov
- **Environmental Protection Agency (EPA)** www.epa.gov
- **State Laws, Codes, Statutes and Regulations** http://statelaws.findlaw.com/state-codes.html
- **Transport Canada (TC)** www.tc.gc.ca

Notes

All Rights Reserved

Conversion Chart

Conversion Units			Multiply By
Length Calculations			
Inches (in)	to	Millimeters (mm)	25.40
Inches (in)	to	Centimeters (cm)	2.540
Feet (ft)	to	Centimeters (cm)	30.48
Feet (ft)	to	Meters (m)	0.3048
Yards (yd)	to	Centimeters (cm)	91.44
Yards (yd)	to	Meters (m)	0.9144
Miles (mi)	to	Kilometers (km)	1.609
Millimeters (mm)	to	Inches (in)	0.03937
Centimeters (cm)	to	Inches (in)	0.3937
Centimeters (cm)	to	Feet (ft)	0.0328
Centimeters (cm)	to	Yards (yd)	0.0109
Meters (m)	to	Feet (ft)	3.281
Meters (m)	to	Yards (yd)	1.094
Kilometers (km)	to	Miles (mi)	0.6214
Area Calculations			
Square Inches (sq-in)	to	Square Millimeters (sq-mm)	645.2
Square Inches (sq-in)	to	Square Centimeters (sq-cm)	6.452
Square Feet (sq-ft)	to	Square Centimeters (sq-cm)	929.0
Square Feet (sq-ft)	to	Square Meters (sq-m)	0.0929
Square Yards (sq-yd)	to	Square Meters (sq-m)	0.8361
Square Miles (sq-mi)	to	Square Kilometers (sq-km)	2.590
Square Millimeters (sq-mm)	to	Square Inches (sq-in)	0.00155
Square Centimeters (sq-cm)	to	Square Inches (sq-in)	0.155
Square Centimeters (sq-cm)	to	Square Feet (sq-ft)	0.001076
Square Meters (sq-m)	to	Square Feet (sq-ft)	10.76
Square Meters (sq-m)	to	Square Yards (sq-yd)	1.196
Square Kilometers (sq-km)	to	Square Miles (sq-mi)	0.3861
Volume Calculations			
Cubic Inches (cu-in)	to	Cubic Centimeters (cu-cm)	16.387
Cubic Inches (cu-in)	to	Liters (L)	0.01639
Quarts (qt)	to	Liters (L)	0.9464
Gallons (gal)	to	Liters (L)	3.7854

All Rights Reserved

Conversion Units			Multiply By
Cubic Yards (cu-yd)	to	Cubic Meters (cu-m)	0.7646
Cubic Centimeters (cu-cm)	to	Cubic Inches (cu-in)	0.06102
Liters (L)	to	Cubic Inches (cu-in)	61.024
Liters (L)	to	Quarts (qt)	1.0567
Liters (L)	to	Gallons (gal)	0.2642
Cubic Meters (cu-m)	to	Cubic Yards (cu-yd)	1.308
Weight Calculations			
Ounces (oz)	to	Grams (g)	28.5714
Pounds (lb)	to	Kilograms (kg)	0.4536
Pounds (lb)	to	Short Tons (US tons)	0.0005
Pounds (lb)	to	Metric Tons (t)	0.00045
Short Tons (US tons)	to	Pounds (lb)	2000
Short Tons (US tons)	to	Kilograms (kg)	907.18486
Short Tons (US tons)	to	Metric Tons (t)	0.90718
Grams (g)	to	Ounces (oz)	0.035
Kilograms (kg)	to	Pounds (lb)	2.205
Kilograms (kg)	to	Short Tons (US tons)	0.001102
Kilograms (kg)	to	Metric Tons (t)	0.001
Metric Tons (t)	to	Pounds (lb)	2205
Metric Tons (t)	to	Short Tons (US tons)	1.1023
Metric Tons (t)	to	Kilograms (kg)	1000
Force Calculations			
Ounces Force (ozf)	to	Newtons (N)	0.2780
Pounds Force (lbf)	to	Newtons (N)	4.448
Pounds Force (lbf)	to	Kilograms Force (kgf)	0.456
Kilograms Force (kgf)	to	Pounds Force (lbf)	2.2046
Kilograms Force (kgf)	to	Newtons (N)	9.807
Newtons (N)	to	Kilograms Force (kgf)	0.10196
Newtons (N)	to	Ounces Force (ozf)	3.597
Newtons (N)	to	Pounds Force (lbf)	0.2248
Torque Calculations			
Pound Inches (lb-in)	to	Newton Meters (Nm)	0.11298
Pound Feet (lb-ft)	to	Newton Meters (Nm)	1.3558

All Rights Reserved

Conversion Units			Multiply By
Pound Feet (lb-ft)	to	Kilograms Force per Meter (kgfm)	0.13825
Newton Meters (Nm)	to	Pound Inches (lb-in)	8.851
Newton Meters (Nm)	to	Pound Feet (lb-ft)	0.7376
Newton Meters (Nm)	to	Kilograms Force per Meter (kgfm)	0.10197
Kilograms Force per Meter (kgfm)	to	Pound Feet (lb-ft)	7.233
Kilograms Force per Meter (kgfm)	to	Newton Meters (Nm)	9.807
Radiator Specific Heat Dissipation Calculations			
British Thermal Unit per Hour (BTU/hr)	to	Kilowatt per Degree Celsius (kW/C)	0.000293
Kilowatt per Degree Celsius (kW/C)	to	British Thermal Unit per Hour (BTU/hr)	3414.43
Temperature Calculations			
Degrees Fahrenheit (F)	to	Degrees Celsius (C)	(F 32) x 0.556
Degrees Celsius (C)	to	Degrees Fahrenheit (F)	(1.8 x C) + 32
Pressure Calculations			
Atmospheres (atm)	to	Bars (bar)	1.01325
Atmospheres (atm)	to	Kilopascals (kPa)	101.325
Bars (bar)	to	Atmospheres (atm)	0.98692
Bars (bar)	to	Kilopascals (kPa)	100
Bar (bar)	to	Pounds per Square Inch (psi)	14.5037
Inches of Mercury (in Hg)	to	Kilopascals (kPa)	3.377
Inches of Water (in H_2O)	to	Kilopascals (kPa)	0.2491
Pounds per Square Inch (psi)	to	Kilopascals (kPa)	6.895
Pounds per Square Inch (psi)	to	Bar (bar)	0.06895
Kilopascals (kPa)	to	Atmospheres (atm)	0.00987
Kilopascals (kPa)	to	Inches of Mercury (in Hg)	0.29612
Kilopascals (kPa)	to	Inches of Water (in H_2O)	4.01445
Kilopascals (kPa)	to	Pounds per Square Inch (psi)	0.145
Power Calculations			
Horsepower (hp)	to	Kilowatts (kW)	0.74627
Kilowatts (kW)	to	Horsepower (hp)	1.34

All Rights Reserved

Conversion Units			Multiply By
Fuel Performance Calculations			
Miles per Gallon (mi/gal)	to	Kilometers per Liter (km/L)	0.4251
Kilometers per Liter (km/L)	to	Miles per Gallon (mi/gal)	2.352
Velocity Calculations			
Miles per Hour (mi/hr)	to	Kilometers per Hour (km/hr)	1.609
Kilometers per Hour (km/hr)	to	Miles per Hour (mi/hr)	0.6214
Volume Flow Calculations			
Cubic Feet per Minute (cu-ft/min)	to	Liters per Minute (L/min)	28.32
Liters per Minute (L/min)	to	Cubic Feet per Minute (cu-ft/min)	0.03531

Safety Regulations and Standards General

All motor vehicles must conform to the motor vehicle safety standards (MVSS) mandated by the U.S. and Canadian Governments. MVSS address the manufacture and sale of a new motor vehicle, not its use. U.S. Federal MVSS and safety regulations are issued and enforced by the National Highway Traffic Safety Administration (NHTSA) of the U.S. Department of Transportation (USDOT). In Canada, motor vehicle safety regulations/standards are issued and enforced by the Ministry of Transport (Transport Canada). Standards and regulations apply to newly manufactured motor vehicles and certain motor vehicle equipment offered for sale, or placed into operation in the United States, its territories (which include the District of Columbia, the Northern Mariana Islands, Puerto Rico, Guam, the Virgin Islands and American Samoa) and Canada. These safety standards and regulations are applicable to motor vehicles and motor vehicle equipment manufactured on and after the effective date of each standard/regulation.

Specific vehicle certification label(s) must be affixed to motor vehicles to certify that the vehicle conforms to all applicable U. S. Federal or Canada Motor Vehicle Safety Standards (FMVSS and CMVSS) at the time of manufacture. For a vehicle manufactured in two or more stages, the party that completes an incomplete vehicle, e.g., by the addition of a load-carrying body, is the final-stage manufacturer and is responsible for certifying (by labeling) that the completed vehicle complies with all applicable FMVSS or CMVSS. Additionally, if a new vehicle that has been certified as a completed vehicle is altered in such a manner that its compliance with any FMVSS or CMVSS is affected, or its weight ratings are changed before its first purchase by a customer, the party performing the alteration must re-certify (re-label) the vehicles compliance with applicable FMVSS or CMVSS. For more information on *vehicle certification*, refer to this guide.

Notes

All Rights Reserved

Safety Regulations and Standards Penalties for Violation

Penalties for noncompliance with U.S. Federal and Canada Motor Vehicle Safety Standards and Regulations are severe. Penalties for U.S. noncompliance can be found in U.S. Code of the Federal Regulations 49CFR§578.Penalties for Canadian noncompliance can be found in Transport Canada's Motor Vehicle Safety Act SC1993, c.16, section 17.

The above penalties may apply to any party that:

- Manufactures a vehicle for sale that does not comply with all applicable MVSS in effect at the time the vehicle was manufactured.
- Offers a vehicle for sale that does not comply with all applicable MVSS in effect at the time the vehicle was manufactured.
- Sells a vehicle that does not comply with all applicable MVSS in effect at the time the vehicle was manufactured.
- Fails to provide the proper certification labels and documents for a vehicle in the manner required.
- Provides the required certification labels and documents in spite of knowing that the vehicle does not comply with all applicable (MVSS).

Both the National Highway Traffic Safety Administration (NHTSA) and Transport Canada may periodically inspect new vehicles subject to the standards and regulations in order to find vehicles that do not comply with the requirements. It is mandatory that all personnel involved with the following know the requirements of the standards and regulations.

- Sales
- Modification or conversion
- Installation of bodies and/or equipment
- Intermediate/final manufacture
- Preparation for delivery
- Maintenance and/or repair

Many public libraries keep a complete, up-to-date copy of the U.S. Code of the Federal Regulations. In Canada, the Motor Vehicle Safety Standards/Regulations may be obtained at Federal government bookstores and many law libraries. The regulations/standards of both countries are also publicly available on the Internet.

The FMVSS can be found in Title 49CFR§571 (e.g., FMVSS 101 is Section 571.101).
The CMVSS, Canadian Motor Vehicle Safety Regulations (CMVSR), Motor Vehicle Tire Safety Regulations (CMVTSR), Technical Standards Documents (TSD) and Test Methods (TM) can be found in C.R.C., c.1038.

https://www.ecfr.gov/current/title-49/subtitle-B/chapter-V/part-571/subpart-B?toc=1

https://tc.canada.ca/en/corporate-services/acts-regulations/list-regulations/motor-vehicle-safety-regulations-crc-c-1038?pedisable=false

https://laws-lois.justice.gc.ca/eng/regulations/SOR-2013-198/

All Rights Reserved

Safety Standards Lists and Tables

The following table lists U.S. Federal and Canada Motor Vehicle Safety Standards applicable to all MACK Class 6, 7 and 8 trucks and truck tractors, or related equipment, sold in the United States and Canada.

U.S/Federal and Canada Motor Vehicle Safety Standards, National Safety Code Standard

U.S. Standard No. (1)	Canada Standard No. (2)	Title of Standard
FMVSS 101	CMVSS 101	Location and Identification of Controls and Displays
FMVSS 102	CMVSS 102	Transmission Shift Lever Sequence, Starter Interlock and Transmission Braking Effect
FMVSS 103	CMVSS 103	Windshield Defrosting and Defogging Systems
FMVSS 104	CMVSS 104	Windshield Wiping and Washing Systems
FMVSS 106	CMVSS 106	Brake Hoses
FMVSS 108	CMVSS 108	Lamps, Reflective Devices, and Associated Equipment/Lighting System and Retroreflective Devices
FMVSS 111	CMVSS 111	Rear-View Mirrors
FMVSS 113	CMVSS 113	Hood Latch System
(3)	CMVSS 115	Vehicle Identification Number
FMVSS 119	(4)	New Pneumatic Tires for Vehicles Other Than Passenger Cars
FMVSS 120	CMVSS 120	Tire and Rim Selection for Motor Vehicles Other Than Passenger Cars
FMVSS 121	CMVSS 121	Air Brake Systems
FMVSS 124	CMVSS 124	Accelerator Control Systems
FMVSS 125	NSCS 11, Section 5 (National Safety Code Standard 11, Section 5) (10)	Warning Devices
FMVSS 136 (9)	CMVSS 136 (9)	Electronic Stability Control Systems for Heavy Vehicles
FMVSS 205	CMVSS 205	Glazing Materials
FMVSS 206	CMVSS 206	Door Locks and Door Retention Components
FMVSS 207	CMVSS 207	Seating and Seat Anchorage Systems
FMVSS 208	CMVSS 208	Occupant Crash Protection
FMVSS 209	CMVSS 209	Seat Belt Assemblies
FMVSS 210	CMVSS 210	Seat Belt Assembly Anchorages
N/A	CMVSS 301.2	CNG Fuel System Integrity
FMVSS 302	CMVSS 302	Flammability of Interior Materials
FMVSS 304	N/A	CNG Fuel Container Integrity
(7)	CMVSS 1100	Vehicle Emissions (8)
(5)	CMVSS 1106	Noise Emissions (6)

All Rights Reserved

U.S. Standard No. (1)	Canada Standard No. (2)	Title of Standard
(1) Found in Title 49, Code of Federal Regulations, Part 571, i.e., FMVSS 101 is 49 CFR 571.101. In addition to the definitions found in the individual Safety Standards, definitions can also be found in 49 CFR 571.3.		
(2) Found in Part II of Schedule IV of the Canadian Motor Vehicle Safety Regulations. In addition to the definitions found in the individual Safety Standards, definitions can also be found in Section 2 and Part I of Schedule IV (CMVSS100) of the Canadian Motor Vehicle Safety Regulations.		
(3) See 49 CFR Part 565 found on next page.		
(4) See MVTSR found on next page.		
(5) See EPA Noise Emissions Regulations.		
(6) Found in Section 5 of Schedule V.1 of the Canadian Motor Vehicle Safety Regulations.		
(7) See EPA Gaseous and Smoke Regulations.		
(8) Administered by Environment Canada.		
(9) Applies to truck tractor only.		
(10) https://www.ccmta.ca/en/national-safety-code		

Safety Standards Lamps and Reflective Devices

U.S. Federal and Canada Motor Vehicle Safety Standards (FMVSS 108 and CMVSS 108) specify requirements for lamps and reflective devices on new vehicles. Lamps and reflective devices installed on MACK vehicles at the assembly plant are installed in compliance with applicable requirements of these standards. The installation of a body or other equipment must not cause these lamps and/or reflective devices to no longer comply with the angular visibility requirements of these standards. Also, an increase in the height of a vehicle must not cause the lamps and/or reflective devices to exceed the height limitations of these standards. Intermediate manufacturers, final-stage manufacturers and vehicle alterer must ensure that equipment installed by the incomplete vehicle manufacturer continues to meet the applicable requirements of these standards. To maintain compliance, lamps and/or reflective devices may have to be relocated. Reorienting a lamp from its installed position, however, may result in the lamp no longer conforming to Standard 108.

Functional Safety Standards

ISO 26262 is the functional safety standard for road vehicles. Functional safety addresses safety-related functionality implemented in electronics and software. Mack follows the standard for new product development after the standard be came applicable to trucks, buses and trailers. This standard replaces Mack internal processes addressing functional safety.

The functionality, supporting body building activities, developed according to ISO 26262 will increase continuously. This support is described in the Functional Safety Manual included in the Electrical/Electronics section of the Body Builder Instructions.

All Rights Reserved

Safety Regulations Lists and Tables

Parts 501 through 595 of Title 49 of the Code of Federal Regulations (CFR) contain various additional vehicle safety regulations addressing such subjects as procedural rules, petitions for rulemaking, defect and noncompliance orders, standards enforcement and defects investigation, exemption for inconsequential defect or noncompliance, manufacturer identification, defect and noncompliance reports, definitions, record retention, defect and noncompliance responsibility, etc., some of which are listed below. Sections 1 through 17, Schedules I, II, III and VII of the Canada Motor Vehicle Safety Regulations address additional subjects such as definitions, national safety mark, classes of vehicles, records, test methods and technical standards documents, etc., some of which are listed below. The Canada Motor Vehicle Tire Safety Regulations (MVTSR) address tire requirements.

Motor Vehicle Safety Regulations

U.S. Regulation CFR Title 49	Canada Regulation	Title of Regulation
Part 565	(See CMVSS 115)	Vehicle Identification Number Requirements
Part 566	N/A	Manufacturer Identification
Part 567		Certification
	MVSR 6	Compliance Label
Part 568		Vehicles Manufactured in Two or More Stages
	MVSR 9	Altered Vehicles
Part 571.3	MVSR 2	Definitions/Interpretation
Part 576	MVSR 10	Record Retention/Records
Part 577		Defect and Noncompliance Notification
	MVSR 15	Notice of Defect
Part 579.26 (See FMVSS 119)	N/A	Reporting of Information and Communications About Potential Defects
	MVTSR	Reporting Requirements for Manufacturers of Tires

Notes

All Rights Reserved

Safety Regulations In-Use Motor Vehicles Sold in U.S.

The Federal Motor Carrier Safety Administration (FMCSA) of the U.S. Department of Transportation establishes and enforces the Federal Motor Carrier Safety Regulations (FMCSR) found in Title 49, Code of Federal Regulations, Parts 350 through 399. While generally applicable to motor carriers, some of these regulations (Parts 393 and 399 in particular) do address design aspects of a vehicle, and, therefore, manufacturers must be aware that compliance with these regulations may be affected by their designs. Most, if not all, of the States have adopted and enforce at least some of these regulations. A list of the titles of the subparts of Parts 393 and 399 follows.

Part 393	Subpart A, General
	Subpart B, Lighting Devices, Reflectors, and Electrical Equipment
	Subpart C, Brakes
	Subpart D, Glazing and Window Construction
	Subpart E, Fuel Systems
	Subpart F, Coupling Devices and Towing Methods
	Subpart G, Miscellaneous Parts (includes sleeper berths, exhaust systems, rear end protection, interior noise levels, and other items)
	Subpart H, Emergency Equipment
	Subpart I, Protection Against Shifting or Falling Cargo
	Subpart J, Frames, Cab and Body Components, Wheels, Steering and Suspension Systems
Part 399	Subpart L, Step, Handhold and Deck Requirements for Commercial Motor Vehicles

The Federal Motor Carrier Safety Regulations can be found on the FMCSR website at:
https://www.ecfr.gov/current/title-49/subtitle-B/chapter-III/subchapter-B

Notes

All Rights Reserved

Weight Regulations

Bridge Gross Weight Formula U.S.

The U.S. Federal Bridge Gross Weight Formula was established to provide a standard for controlling the spacing of axles on trucks that use highway bridges. The purpose is to spread the load over a greater area of the highway surface by spacing the axles over a longer length of the vehicle, or combination vehicle. This prevents highway damage caused by high concentrations of load.

The U.S. Federal Government established the following formula for determining the allowable weight limits and axle spacings for trucks:

https://ops.fhwa.dot.gov/freight/sw/regulations/index.htm

Size Regulations

Maximum overall vehicle width is regulated by the Federal Highway Administration (FHWA) in Title 23, Code of Federal Regulations (CFR), Part 658 can be found at:

https://www.ecfr.gov/current/title-23/chapter-I/subchapter-G/part-658?toc=1

No state shall impose a width limitation of more or less than 102 in, or its approximate metric equivalent, 2.6 m (102.36 in) on a vehicle operating on the National Network (NN), except the State of Hawaii, which is allowed to keep the States 2.7 m (108 in) width maximum.

- Maximum Width 2.6 m (102 in)
- Length Limitations on length for straight trucks are regulated by states.

The above applies to truck tractors and trailers operating on the National Network, i.e., the Interstate Highway System and designated Federal-aid highways. Some states have more restrictive width limitations applicable to state highways. Overall width of straight trucks is regulated by individual states.

To ensure that the most current regulatory information is available, a subscription to a service that provides updated information on a regular basis should be considered.

J. J. Keller Associates, Inc., is the preferred supplier of safety compliance publications, training videos and software, forms, supplies, and training workshops. Contact Keller at 800-327-6868, or visit its web site at: www.jjkeller.com.

Truck Conspicuity

To make a truck tractor more conspicuous when approached from the rear at nighttime when being operated without a semitrailer, federal regulations require reflective devices be applied to the rear of the cab and to the mudflaps or mudflap hanger brackets if mudflaps or mudflap hanger brackets were supplied by the vehicle assembly plant. If mudflaps or mudflap hanger brackets were not supplied from the vehicle assembly plant, reflective devices must be applied to the rear, lower portion of the cab. Refer to the illustration. Locations of these reflective devices may vary from this illustration, depending on the cab model and/or equipment at the rear of the cab. Detailed requirements can be found in U.S. Federal Motor Vehicle Safety Standards (FMVSS) 108..

If installed equipment obstructs the view of any installed reflectors, the reflectors must be relocated, in accordance with FMVSS 108, to a location where they will be visible.

All Rights Reserved

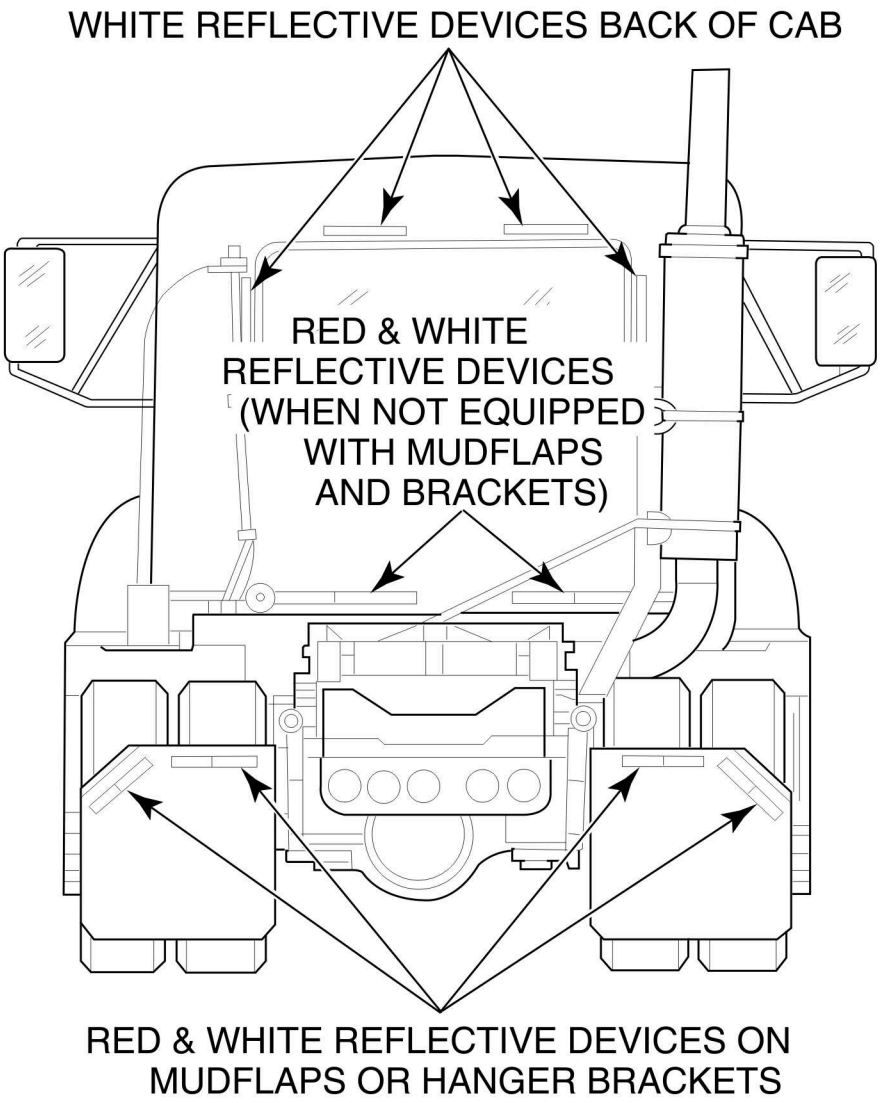

W0116152

Fig. 1 Back of Cab Reflective Devices

All Rights Reserved

Vehicle Certification

U.S. Federal Motor Vehicle Safety Regulations (Title 49, Code of Federal Regulations, Part 567 and Part 568) and Canadian Motor Vehicle Safety Regulations (C.R.C., c. 1038 Sections 6, 7 and 8) require that one or more certification labels be affixed to all new vehicles, depending on the country and how many stages of manufacture the vehicle goes through. These regulations require that the certification label be of a specified form and that it be located on the vehicle in one of several specific locations. All companies that install components on newly manufactured vehicles before delivery to the end user should become totally familiar with these regulations.

Many public libraries keep a complete, up-to-date copy of the Codes of Federal Regulations. In Canada, the regulations may be obtained at Federal government bookstores and many law libraries. The regulations of both countries are also available on the Internet at the following addresses:

- United States - https://www.ecfr.gov/
- Canada - http://www.tc.gc.ca/eng/acts-regulations/regulations-crc-c1038.htm
- https://www.worktruckshow.com/WTS/Home/WTS/home.aspx?hkey=a2e66ae5-57d3-478c-8675-4eda7a4ac859

Incomplete and Completed Vehicles

Mack Trucks, Inc. manufactures both incomplete vehicles and completed vehicles. U.S. regulations define an incomplete vehicle as an assemblage consisting, at a minimum, of chassis (including the frame) structure, powertrain, steering system, suspension system and braking system, in the state that those systems are to be part of the completed vehicle, but requires further manufacturing operations to become a completed vehicle; or an incomplete trailer.

Canadian regulations define an incomplete vehicle as a vehicle that consists, at a minimum, of a chassis structure, power train, steering system, suspension system and braking system in the state in which they are to be part of the completed vehicle but requires further manufacturing operations to become a completed vehicle, or as an incomplete trailer.

A completed vehicle is defined by U.S. regulations as a vehicle that requires no further manufacturing operations to perform its intended function. (The alteration of readily attachable components such as mirrors or tire and rim assemblies, or minor finishing operations such as painting do not change the status of a completed vehicle.) The Canadian regulation uses a very similar definition.

All Rights Reserved

Mack Trucks, Inc. affixes some type of vehicle safety certification label or information label to each completed vehicle and incomplete vehicle destined for sale in the U.S. or in Canada. Typical examples are shown.

Note: Mack Trucks does not manufacture MD completed vehicles.

Since February 2003, a Canadian regulation has required that an incomplete vehicle manufacturers information label be affixed to incomplete vehicles destined for sale in Canada. Beginning September 1, 2006, a revised U.S. regulation will require a similar label. Typical labels are shown.

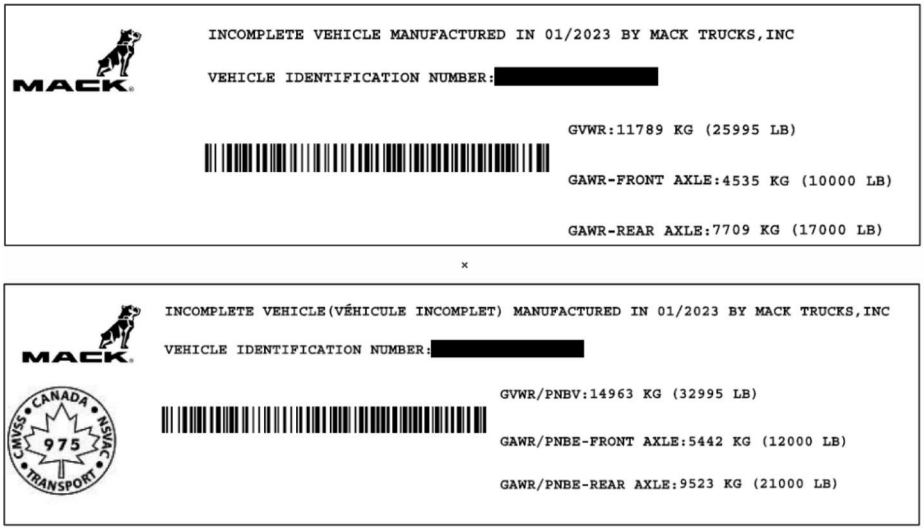

Fig. 2 Typical Incomplete Vehicle Manufacturers Information Label

All MACK incomplete vehicles are supplied with an incomplete vehicle document (IVD) inside the cab. The IVD contains specific statements about the certification status of the vehicle as it left the vehicle assembly plant. The information in the IVD is to be used by intermediate and/or final-stage manufacturers during the completion of further certification procedures. This document should remain with the vehicle until the vehicle is certified as a completed vehicle. The final-stage manufacturer should file the IVD with the records it retains relative to the vehicle.

All Rights Reserved

Canada National Safety Mark

A Canadian regulation requires manufacturers to obtain a unique authorization number from Transport Canada that must be incorporated into each manufacturers National Safety Mark used on labels. For additional information, contact the Canadian Truck Equipment Association (CTEA) at 519-631-0414. The regulation specifies requirements for the form, wording and location of the National Safety Mark.

Intermediate Manufacturers

An intermediate manufacturer is defined by a Canadian regulation as a company, other than the incomplete vehicle manufacturer or the final-stage manufacturer, that performs manufacturing operations on an incomplete vehicle. U.S. regulations use a somewhat similar definition.

U.S. regulations require all intermediate manufacturers to affix an intermediate manufacturer's information label to the incomplete vehicle and attach an addendum to the incomplete vehicle document (IVD). This is similar to the Canadian requirement.

A partially printed U.S. intermediate manufacturer's information label is available through the MACK Parts System. For the label required by Canadian regulations, please contact the Canadian Truck Equipment Association (CTEA) at 519- 631-0414. Both regulations have specific requirements for form, wording and location of the label.

Note: The Canadian version of the label must also contain the intermediate manufacturer's unique National Safety Mark.

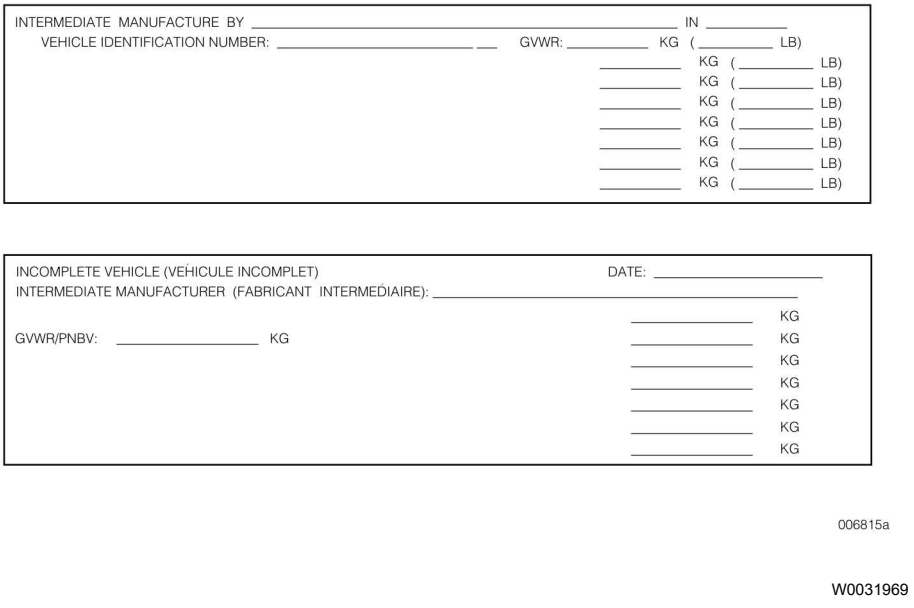

Fig. 3 Typical Intermediate Manufacturers Information Label

All Rights Reserved

Final-Stage Manufacturer

A final-stage manufacturer is defined by a Canadian regulation as a company that performs manufacturing operations on an incomplete vehicle so that it becomes a completed vehicle. A U.S. regulation uses a somewhat similar definition.

The final-stage manufacturer must ensure that the vehicle complies with all applicable Motor Vehicle Safety Standards (MVSS) and must affix a final-stage manufacturers certification label of the specific form and wording, and in a specific location as required by the applicable regulation. The final-stage manufacturer should file the IVD with the records it retains relative to the vehicle.

Figure 2 illustrates typical labels.

Note: The Canadian version must also contain the final-stage manufacturers unique National Safety Mark.

A partially printed U.S. final-stage manufacturers certification label is available through the MACK Parts System. For the label required by Canadian regulations, please contact the Canadian Truck Equipment Association (CTEA) at 519-631-0414.

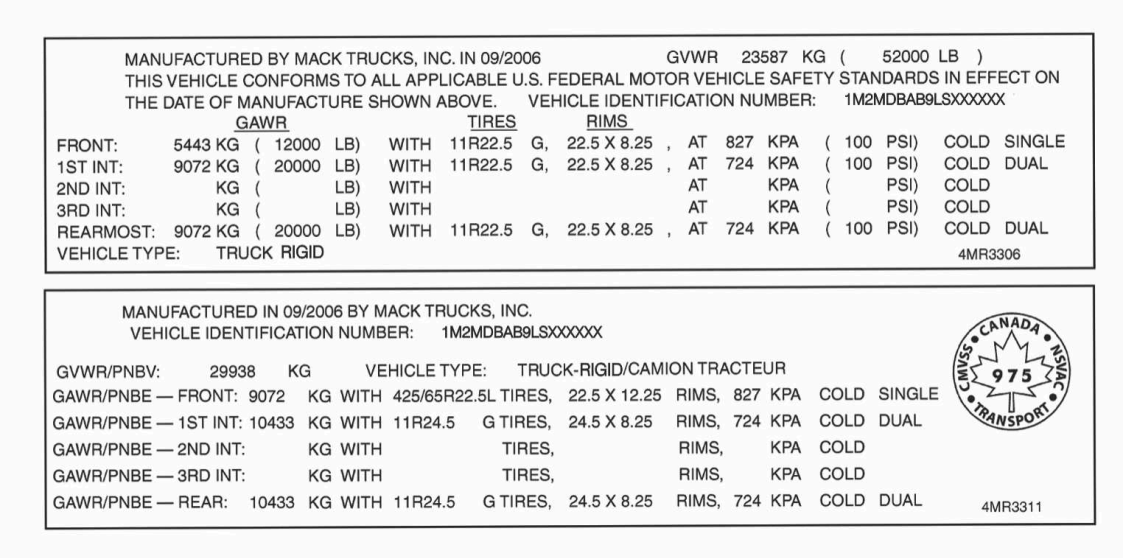

T8163058

Fig. 4 Typical Final-Stage Manufacturers Certification Label

All Rights Reserved

Certification Vehicle Alterer

Although not specifically defined in current U.S. or Canadian regulations, a vehicle alterer is any person who modifies, adds to or alters a previously certified completed vehicle in a way that affects its compliance with applicable safety standards, its vehicle type or its gross axle weight ratings or gross vehicle weight rating, prior to the sale of the completed vehicle, or placing the vehicle in service. An example of a vehicle alterer would be a person who installs, prior to delivery of the vehicle to the final customer, a lift axle on a previously certified completed vehicle.

Beginning September 1, 2006, a revised U.S. regulation defines an altered vehicle as a completed vehicle previously certified that has been altered other than by the addition, substitution or removal of readily attachable components, such as mirrors or tire and rim assemblies, or by minor finishing operations such as painting, before the first purchase of the vehicle other than for resale, in such a manner as may affect the conformity of the vehicle with one or more Federal Motor Vehicle Safety Standards (FMVSS) or the validity of the vehicles stated weight ratings or vehicle type classification. The revised U.S. regulation also defines an alterer as a person who alters by addition, substitution, or removal of components (other than readily attachable components) a certified vehicle before the first purchase of the vehicle other than for resale.

Upon completion of the alterations, both U.S. and Canadian vehicle certification regulations require that the vehicle alterer ensure and certify that the vehicle still complies with all applicable Motor Vehicle Safety Standards (MVSS) and Regulations, and attach to the vehicle label of a specific form and wording in a specific location. Typical examples of a vehicle alterers certification labels are shown below.

Note: The Canadian version must also contain the alterers unique National Safety Mark.

A partially printed U.S. vehicle alterers certification label is available through the MACK Parts System. For the label required by Canadian regulations, please contact the Canadian Truck Equipment Association (CTEA) at 519-631-0414.

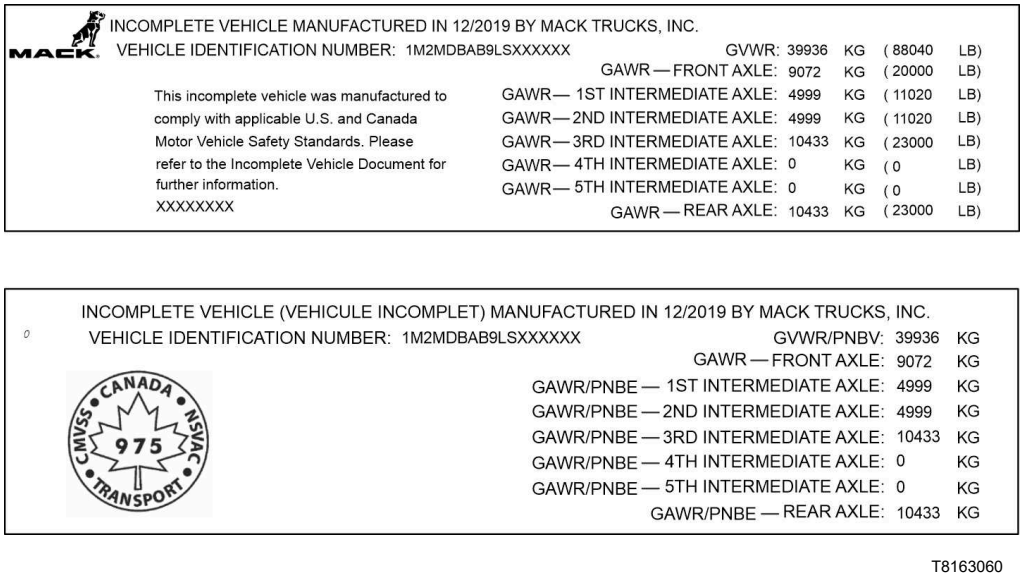

Fig. 5 Typical Vehicle Alterers Certification Label

All Rights Reserved

Vehicle Identification Number (VIN) Label

All motor vehicles are required to be identified by a 17-digit VIN. U.S. and Canadian regulations dictate the format of the number. The VIN gives specific information about the vehicle as manufactured by MACK, such as type of vehicle, model, type of brake system, gross vehicle weight range and model year.

The VIN is stamped on the left-side frame rail (near to front brake chamber). When the vehicle is received, check the VIN on the vehicle and verify that they are identical. The vehicle identification number must not be changed, covered or obliterated.

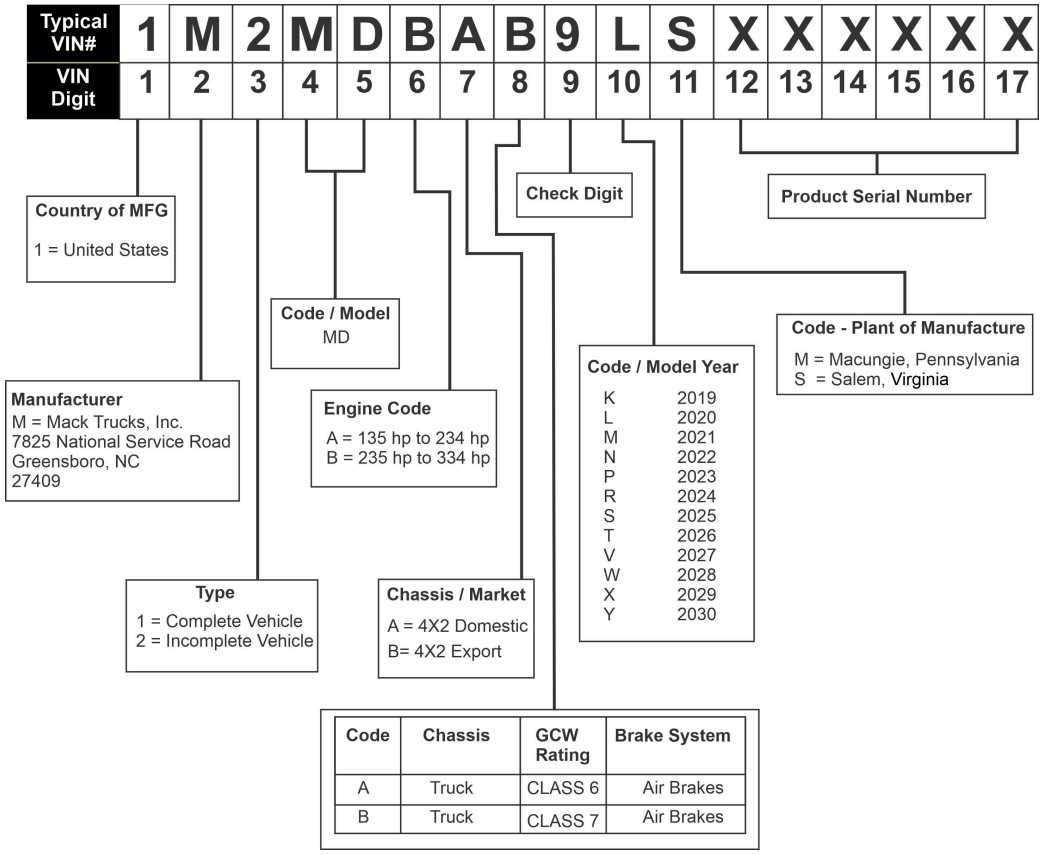

T0159138

All Rights Reserved

Engine Size/Fuel Types:

CODE	HP	Description	Engine Manufacturer	Model	Fuel
A	220	6.7-liter engine	CUMMINS	B6.7	Diesel
B	240	6.7-liter engine	CUMMINS	B6.7	Diesel
	250	6.7-liter engine	CUMMINS	B6.7	Diesel
	260	6.7-liter engine	CUMMINS	B6.7	Diesel
	280	6.7-liter engine	CUMMINS	B6.7	Diesel
	300	6.7-liter engine	CUMMINS	B6.7	Diesel

Chassis/Market:

CODE	CHASSIS	MARKET
A	4x2	DOMESTIC
B	4x2	EXPORT

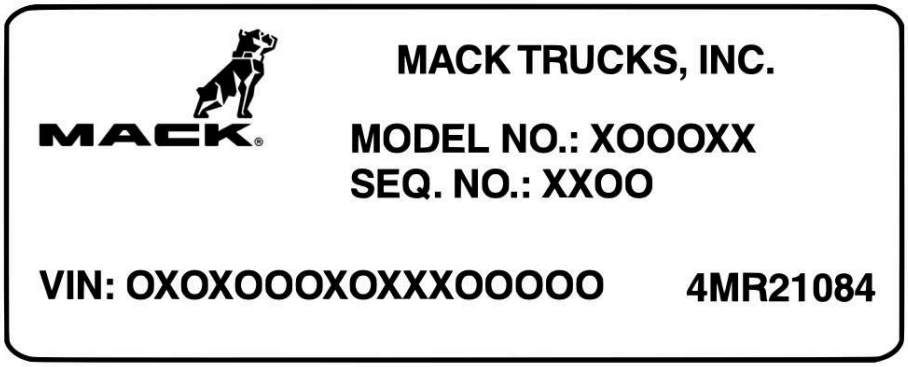

006690a

W0132816

Fig. 6 VIN Label

All Rights Reserved

Regulatory Labels

In addition to, or in place of the previously mentioned labels, Mack Trucks, Inc. may affix one or more of the following labels to the cab.

Heater/Defroster Omission Label

A windshield defroster, as required by U.S. Federal Motor Vehicle Safety Standards (FMVSS) 103, *Windshield Defrosting and Defogging*, is not required for vehicles destined for sale in the State of Hawaii, Puerto Rico, the Northern Mariana Islands, Guam, the Virgin Islands and American Samoa. Vehicles destined for sale in these areas must; however, conform to all other applicable FMVSS regulations. If a vehicle destined for sale in one of these areas does not have a factory-installed defroster, a label is affixed to the cab near the vehicle certification label (see illustration below).

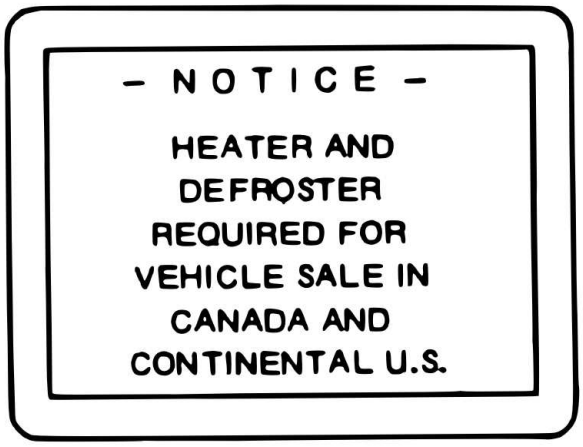

000238a

W0031974

Fig. 7 Omission of Heater/Defroster Label

All Rights Reserved

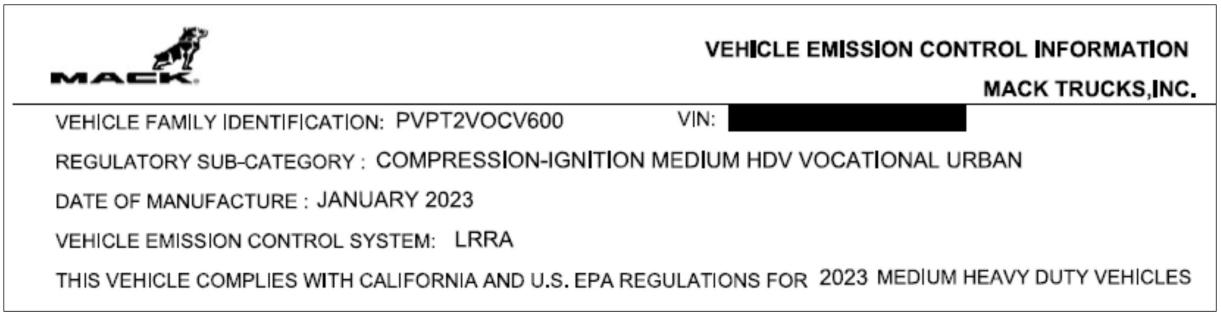

Fig. 8 Vehicle emission Label

Notes

Emissions Gaseous and Noise

Modification of the chassis exhaust system may affect compliance with noise emission regulations, gaseous emission regulations and/or overall vehicle width regulations. Therefore, such modifications should be avoided, as it is the responsibility of the body/equipment installer/alterer to ensure that the MACK vehicle remains in compliance with all applicable regulations. Examples of modifications that could affect compliance with the various regulations are as follows:

- Replacing a muffler with a section of exhaust pipe will result in noncompliance with applicable noise regulations.
- Replacing a catalytic muffler and/or aftertreatment diesel particulate filter (DPF) with a section of exhaust pipe will result in noncompliance with applicable noise and gaseous emission regulations.
- Installing an exhaust diverter valve (such as a valve used to divert exhaust gases into a dump body to provide heat to the cargo) between the engine and a catalytic muffler and/or diesel particulate filter (DPF) will result in noncompliance with applicable gaseous emission regulations.
- Reorienting the end of the exhaust pipe (such as moving the exhaust outlet so that it exits in a different direction than originally intended) may result in noncompliance with applicable noise emission regulations.
- Reconfiguring the end of a vertical exhaust pipe (i.e., installing an offset vertical pipe to go around a dump body cab protector) may result in the vehicle exceeding applicable overall width regulations.

All Rights Reserved

Gaseous and Smoke Emissions U.S.

Engines in motor vehicles must comply with the regulations established and enforced by the U.S. Environmental Protection Agency (EPA) contained in Title 40, Code of Federal Regulations (CFR), Parts 85 and 86, relative to gaseous and smoke emissions. These regulations were authorized by the U.S. Clean Air Act (CAA). The CAA is codified as Title 42, United States Code (U.S.C.), CHAPTER 85, Air Pollution Prevention and Control. The CAA prohibits the removal or rendering inoperative of any device or element of design installed on or in a motor vehicle or motor vehicle engine in compliance with Federal emissions regulations by any person prior to the sale and delivery to the ultimate purchaser, or by any manufacturer or distributor after its sale and delivery to the ultimate purchaser, or by any person engaged in the business of repairing, servicing, selling, leasing, or trading motor vehicles or motor vehicle engines following its sale and delivery to the ultimate purchaser, or by any person who operates a fleet of motor vehicles following its sale and delivery to the ultimate purchaser. Fines for violations of the Act can be as much as $25,000 per day of violation. As an example, if a MACK vehicle was originally equipped with a catalytic muffler and/or diesel particulate filter (DPF) in order to comply with Federal emissions regulations, removal of the muffler and/or filter or replacement of the muffler with a non-equivalent muffler and/or filter is prohibited and possibly subject to a fine. A list of gaseous emission control systems and components may be found in the *Emission Control Systems for MACK Class 8 Diesel Engines* manual, or similar manual for non-MACK engines provided in the cab of each MACK vehicle. Environmental Protection Agency regulations can be found on the EPA website at www.epa.gov/epahome/cfr40.htm.

Gaseous and Smoke Emissions California

The engines in motor vehicles to be registered in the state of California must comply with applicable regulations established and enforced by the California Air Resources Board (CARB) contained in Title 13 of the California Code of Regulations (CCR), relative to gaseous and smoke emissions. These regulations prohibit disconnecting, modifying or altering a certified emission control system. Fines for violation of these prohibitions may be as much as $1,500 per violation. As an example, if a MACK vehicle was originally equipped with a catalytic muffler and/or aftertreatment diesel particulate filter (DPF) in order to comply with CARB emissions regulations, removal of the muffler and/or filter or replacement of the muffler with a non-equivalent muffler and/or filter is prohibited and possibly subject to a fine. A list of emission control system components may be found in the *Emission Control Systems for MACK Class 8 Diesel Engines* manual, or similar manual for non-MACK engines provided in the cab of each MACK vehicle. Title 13 of the California Code of Regulations can be found on the CCR website at www.calregs.com.

Gaseous and Smoke Emissions Canada

Engines in motor vehicles must comply with the regulations established and enforced by Environment Canada contained in Schedule V of the Canada Motor Vehicle Safety Regulations, relative to gaseous and smoke emissions. These regulations (Standard 1100) were authorized by the Canadian Motor Vehicle Safety Act. The Act is codified as Statutes of Canada, 1993 Chapter 16. Tampering regulations are promulgated and enforced by the Provinces. If a MACK vehicle was originally equipped with a catalytic muffler and/or aftertreatment diesel particulate filter (DPF) in order to comply with Federal emissions regulations, removal of the muffler and/or filter or replacement of the muffler with a non-equivalent muffler and/or filter is prohibited and possibly subject to a fine. A list of gaseous emission control systems and components may be found in the *Emission Control Systems for MACK Class 8 Diesel Engines* manual, or similar manual for non-MACK engines provided in the cab of each MACK vehicle. Standard 1100 (CMVSS 1100) can be found under Motor Vehicle Safety Regulations on the Transport Canada website http://www.tc.gc.ca/eng/acts-regulations/regulations-crc-c1038.htm.

Noise Emissions U.S.

Motor vehicles must also comply with the regulations established and enforced by the U.S. Environmental Protection Agency (EPA) contained in Title 40, Code of Federal Regulations (CFR), Part 205, relative to noise emissions. These regulations were authorized by the U.S. Noise Control Act of 1972. This Act is codified as Title 42, United States Code (U.S.C.), CHAPTER 65, Noise Control. The Act prohibits tampering with a vehicles noise control system. A list of those acts presumed to constitute tampering on MACK vehicles (such as removal of a muffler, or removal of sound deadening material from the hood) may be found in the Noise Emission Control section of the MACK *Maintenance and Lubrication* manual provided in the cab of each MACK vehicle. Fines for violations of the Act can be as much as $50,000 per day of violation. EPA regulations can be found on the EPA website at www.epa.gov/epahome/cfr40.htm.

All Rights Reserved

Noise Emissions Canada

Requirements are a part of the Canada Motor Vehicle Safety Standards (CMVSS), specifically CMVSS 1106, Noise Emissions. Standard 1106 can be found under Motor Vehicle Safety Regulations on the Transport Canada website at http://www.tc.gc.ca/eng/acts-regulations/regulations-crc-c1038.htm.

Notes

All Rights Reserved

Inspection of Chassis

Chassis delivered from the assembly plant directly to the body installers facility should be inspected for damage, such as paint damage, cab interior and exterior damage, frame damage, etc. The frame should be thoroughly inspected for damage, particularly if the chassis are delivered decked. Frame damage can occur if the saddle used to mount the decked chassis is improperly installed.

Inspect the chassis promptly upon delivery and note any damage on the Inspection/Vehicle Receipt form, and make sure that the delivering driver is aware of the damage and that he signs the delivery documents indicating his knowledge of the damage.

The mirrors used on certain model chassis employ a break-away strut that is designed to break away should the mirror hit an object. In many instances, when chassis are shipped from the assembly plant, the strut will be disconnected from the mirror bracket, and the mirror will be folded back against the cab. The strut is reattached to the bracket as follows:

1 Push mirror bracket forward, as far as it will go.
2 Align end of strut with slot in receptacle.
3 Pull bracket rearward to snap strut in place. The strut head should be centered fore-aft in the receptacle.

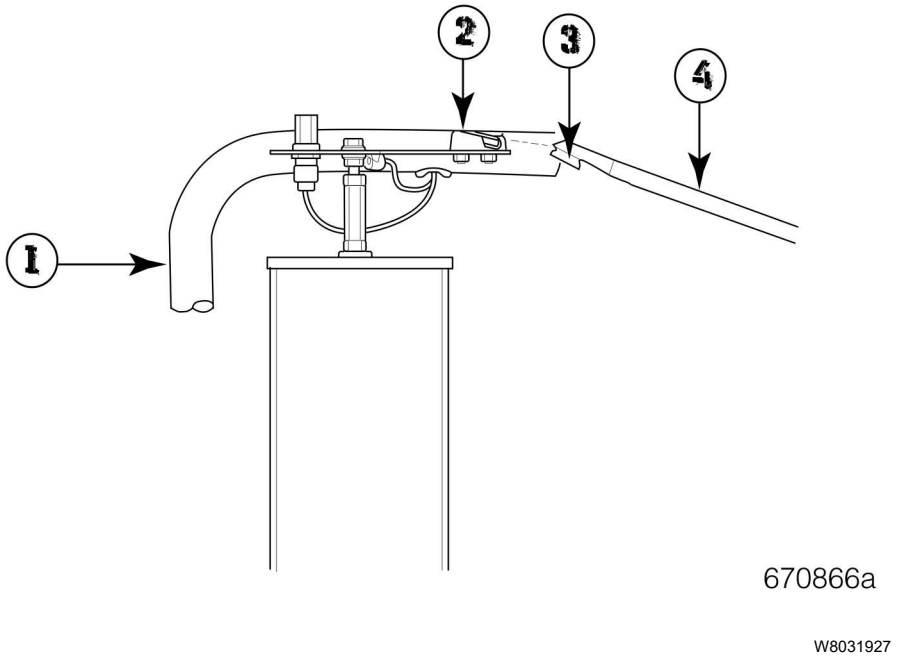

Fig. 9 Break-Away Mirror Strut

1. Mirror Bracket
2. Receptacle
3. Plastic Strut Head
4. Mirror Break-Away Strut

All Rights Reserved

Body Installation General Precautions

Unless prior approval has been granted by Mack Trucks, Inc., the following is prohibited:

- Modifications to the chassis frame, brake system, suspension, electrical system (i.e., lights, harness modifications, etc., except for those required to operate the installed body), powertrain, fuel system and exhaust system, beyond the recommendations outlined in this guide.
- Drilling of reinforcement gussets.
- Cutting grooves, notches or slots in the main frame rail flanges, gusset flanges or cross members unless specifically authorized to do so by Mack Trucks, Inc.
- Modifications to original-equipment bolts and other fasteners for mounting of a body or subframe.
- Methods and procedures for lengthening and shortening the frame not outlined in this guide.
- Relocation of air reservoirs and air valves are not allowed unless approved by Mack Trucks, Inc.
- Using the power steering pump to power accessory hydraulic systems.
- Modifications to the exhaust system unless approved by Mack Trucks, Inc.

Note: Aftertreatment diesel particulate filters (DPF) and related components cannot be moved or altered from the OEM location in any fashion. Moving or altering the DPF or related components will result in emission system malfunction or failure.

Note: The DEF Tank filler area must be protected or shielded from solid or liquid debris falling from normal refuse pick up operations or body clean out operations.

Note: In all cases, safety-related systems (brakes, electrical, etc.) must remain in accordance with the Mack Trucks, Inc. specifications. Parties performing modifications not conforming with these standards do so at the risk of assuming all consequential liability.

Note: Multiple body component installations, such as a hoist along with a roll-off flat bed, or other similar types of installations, require a single subframe for both units. Using a separate subframe for each component will result in frame damage.

Note: Installation of a body and related equipment onto a chassis must not reduce the effectiveness of a component and/or system previously installed on the chassis. Reducing or obstructing the sound path of an audible backup warning device or reducing/obstructing the light path of a lamp or reflective device are examples of reducing the effectiveness of a previously installed component and/or system. Some components and/or systems may require relocation to ensure the intended level of effectiveness.

Compliance with motor vehicle safety standards, motor vehicle safety regulations, motor carrier safety regulations, noise emission control regulations and gaseous and smoke emission regulations must be maintained.

All Rights Reserved

Precautions Modifications on Anti-Lock Brake Equipped Vehicles

Connecting electrically powered or electrically controlled equipment on an Anti-lock Brake System (ABS) equipped vehicle may cause interference with the ABS system. The amount of interference depends upon the operating frequency of any new signals and the degree to which transient signals are coupled into the vehicle electrical system.

Note: Whenever new electrical equipment is installed, it is the obligation of the installer to ensure that the new equipment does not interfere with the proper operation of all other electrical systems on the vehicle.

The ABS system is based on the Bendix® ABS-8, which uses the standard ABS components (such as wheel speed sensors and modulator valves). This system applies brakes and reducing engine power as required by the specific situation.

Before delivery to the end user, a parameter set tuned for the specific vehicle and the vehicle identification number (VIN) for the chassis is loaded into the ABS ECU. This ensures optimal performance of the ABS system for the specific vehicle.

⚠ DANGER

Effectiveness of the ABS system relies on the accuracy of the reported vehicle speed. If major changes to tire sizes are made, such that changes to the vehicle speedometer/odometer settings are required, the ABS ECU must be reprogrammed with the new values by a qualified technician.

All Rights Reserved

Under-ride Protection

Depending upon the final configuration of the rear of the vehicle, U.S. Federal or state regulations may require the addition of an appropriate rear impact guard for under-ride protection. Installation of the rear impact guard is the responsibility of the manufacturer who is responsible for the final certification of the vehicle.

Notes

All Rights Reserved

Aluminum Part Protection

Aluminum parts must be protected when brought into direct contact with other metals, as corrosion may be accelerated due to this contact and exposure to moisture and air.

Aluminum parts to be joined to parts of dissimilar metal, without benefit of paint or other surface covering, must have all mating surfaces coated with Alumalastic compound, or equivalent.

Alumalastic

Caulking Compound Grade C B

The Parr Paint and Color Company

Syracuse and Brussels Road

Cleveland, Ohio 44110

Aluminum parts to be press fitted to parts of dissimilar metal must have contacting surfaces coated with one of the following protective agents:

Grafo 253

Grafo Colloids Corporation

Sharon, Pennsylvania 16146

Tower 3364

Tower Chemical Corp.

2703 Freemansburg Avenue

Easton, Pennsylvania 18042

Mailing Address:

P.O. Box 3070

Palmer, Pennsylvania 18043

Alodine Coating

Kaiser Aluminum and Chemical Corp.

1015 East 12th Street

Erie, Pennsylvania 16503

CAUTION

When protective coatings are used between aluminum and ferrous surfaces, the threads on bolts and nuts used must be wiped clean before assembly. These coatings act as lubricants, and incorrect torque values will be obtained, with the possibility of thread stripping, if this procedure is not followed.

All Rights Reserved

Paint Codes

A paint code label is affixed to the cab of all MACK chassis to provide an easy reference for the different color paints that were used to paint a particular chassis. The label is located on the driver-side door hinge pillar, door latch post, door edge that meets the door latch post, an inward-facing surface of the door or the outboard side of the instrument panel. If it is necessary to match paint, refer to the paint code label to obtain the appropriate paint code.

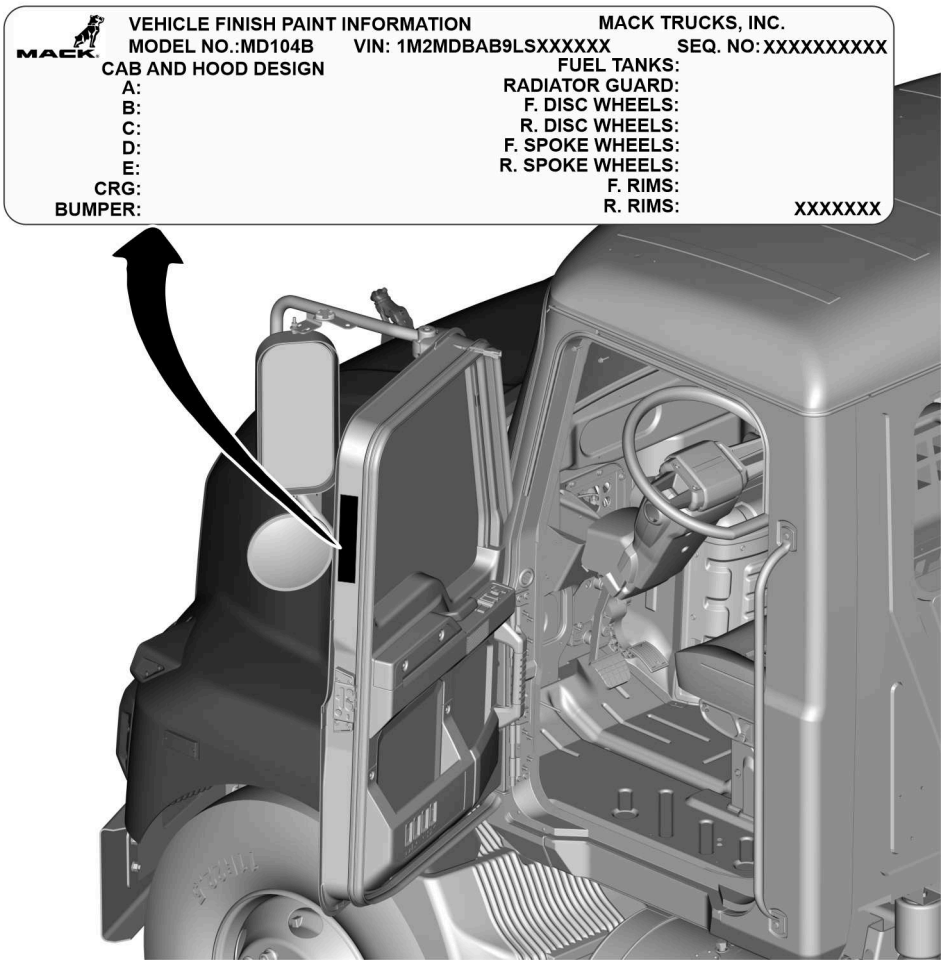

Fig. 10 Paint Code Label and Typical Locations

All Rights Reserved

Hood Opening Angle and Height

When the hood opens, it increases in height. Prior to opening the hood, ensure that the work area is free of obstacles.

The hood opening angle (A) is measured from centre of hinge to the edge of hood bottom surface in the opened position.

The height of hood (B) is measurement from the top frame rail to the maximum height of the hood in the opened position.

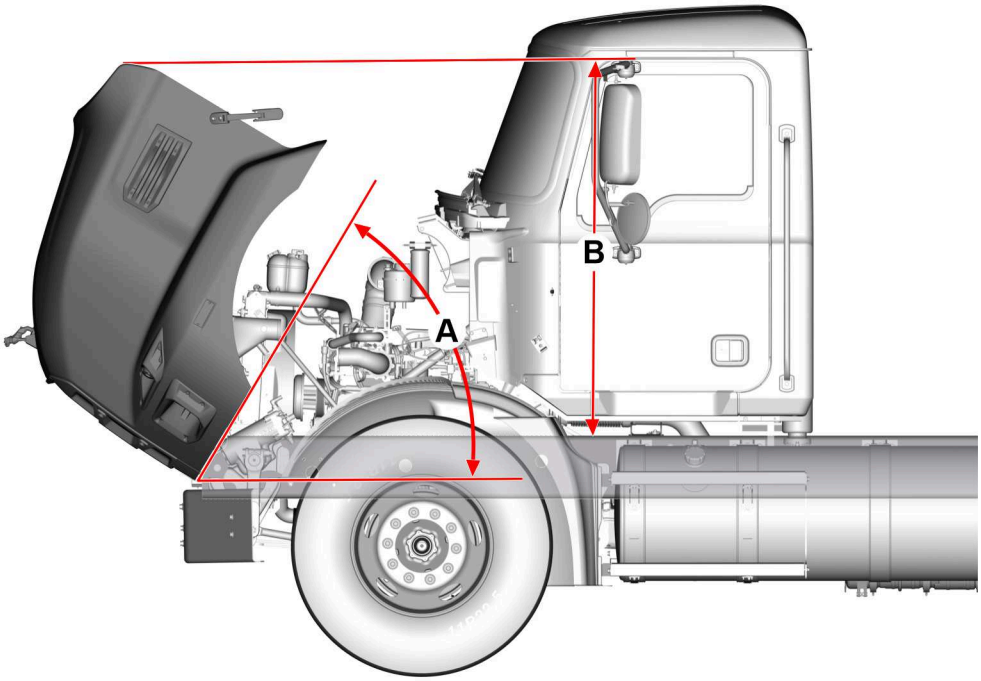

T8163824

Hood Opening Angle (A)	49°
Maximum Height of Hood (B)	62 in

All Rights Reserved

Vehicle Configuration Applications and Dimensions Conventional

The following illustrations outline the vehicle models/configurations available in the MACK Bulldog line, along with typical applications, wheelbase dimensions, front and rear axle weight ratings. If additional information is required, contact your local MACK dealer or the Mack Trucks, Inc. Sales Engineering Department.

MMD Generation 1, 4x2 Dimensions/Configurations

Acceptable vehicle applications include: on-highway, local pick-up and delivery, refrigerated goods delivery, flat bed and stake, dump, refuse and equipment haulers.

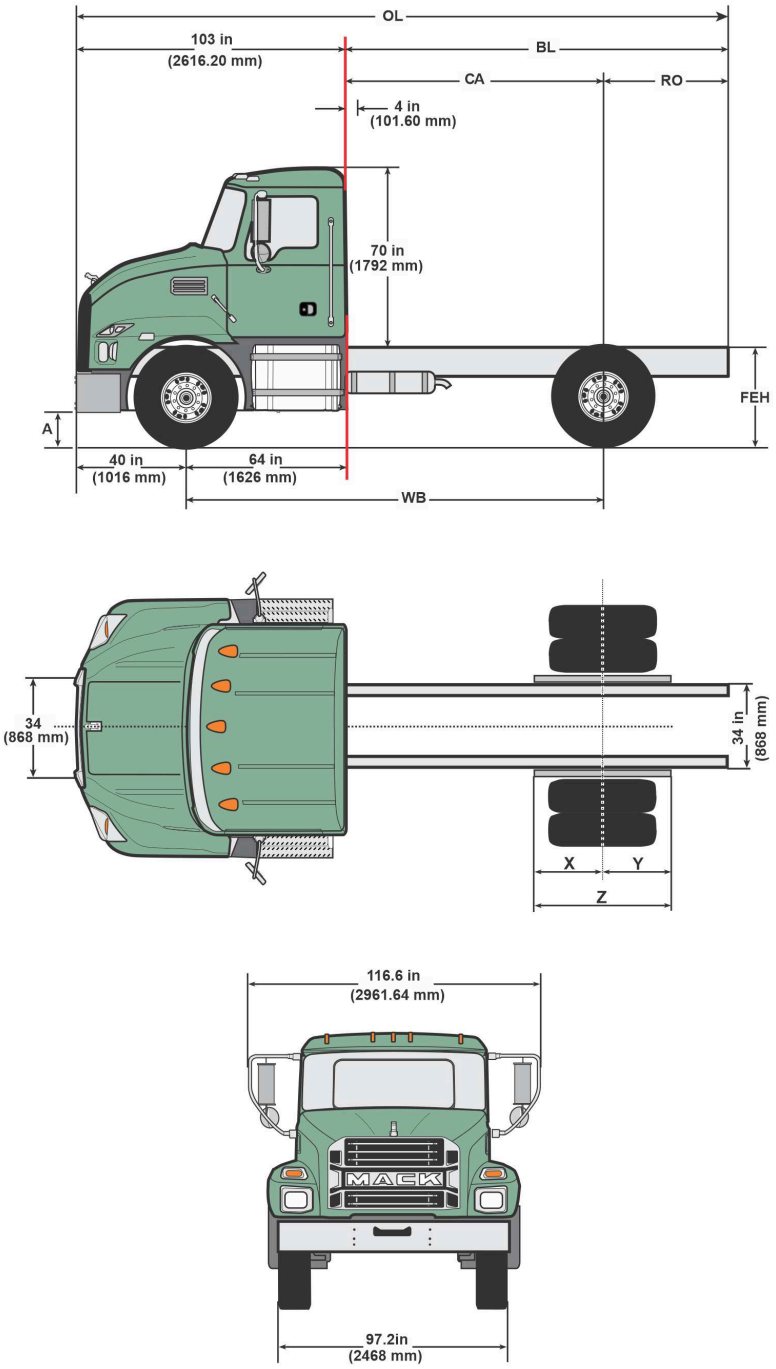

T0159137

All Rights Reserved

MD6/MD7, Class-6/Class-7									
Typical Dry Van Body Length[1] (ft.)			10	12/14	16	18	20	22	24	26
Wheelbase[2] (WB) in inches (mm)			150 (3810)	166 (421-6)	186 (472-4)	206 (5232)	221 (5613)	236 (5994)	251 (637-5)	270 (6858)
Bumper-to-Back-Of-Cab in inches (mm)			103 (2616)	103 (261-6)	103 (261-6)	103 (2616)	103 (2616)	103 (2616)	103 (261-6)	103 (2616)
Bumper-to-Front Axle in inches (mm)			40 (1016)	40 (101-6)	40 (101-6)	40 (1016)	40 (1016)	40 (1016)	40 (101-6)	40 (1016)
Cab to Rear Axle (CA) in inches (mm)			87 (2210)	103 (261-6)	123 (312-4)	143 (3632)	158 (4013)	173 (4394)	188 (477-5)	207 (5258)
Rear Overhang Chassis (RO) in inches (mm)			50 (1270)	55 (139-7)	60 (152-4)	65 (1651)	70 (1778)	80 (2032)	90 (228-6)	100 (2540)
Back-Of-Cab to End of Frame (BL) in inches (mm)			136 (3454)	157 (398-7)	172 (436-8)	207 (5257)	227 (5765)	252 (6400)	277 (703-5)	306 (7772)
Overall Length Chassis only (OL) in inches (mm)			240 (6096)	261 (663-0)	286 (726-4)	311 (7874)	341 (7900)	356 (9042)	381 (967-7)	410 (1041-4)
Frame End Height (FEH) in inches (mm)	**Unladen**		40.5 (1029)							
	Laden		38.3 (972)							
Bumper-to-Ground (A) in inches (mm)			17.5 (444)							
Length of rear suspension from center of axle in inches (mm)	**Leaf suspension**	**X**	28.5 (723)							
		Y	28.9 (735)							
	Air suspension	**X**	26.4 (670)							
		Y	32.1 (735)							
Rear suspension full length in inches (mm)	**Leaf suspension**	**Z**	57.4 (1459)							
	Air suspension	**Z**	58.5 (1486)							

1 Typical van body lengths assume level load to maximize GVWR. No specific consideration taken for driver, passengers, or fuel addition of ancillary equipment such as lift gates and refrigeration units not considered in calculations.

2 Wheelbase selection should be based on specific weight distribution.

All Rights Reserved

Back of Cab and Fuel Tank Dimensions Conventional

BOC and Fuel Tank Dimensions

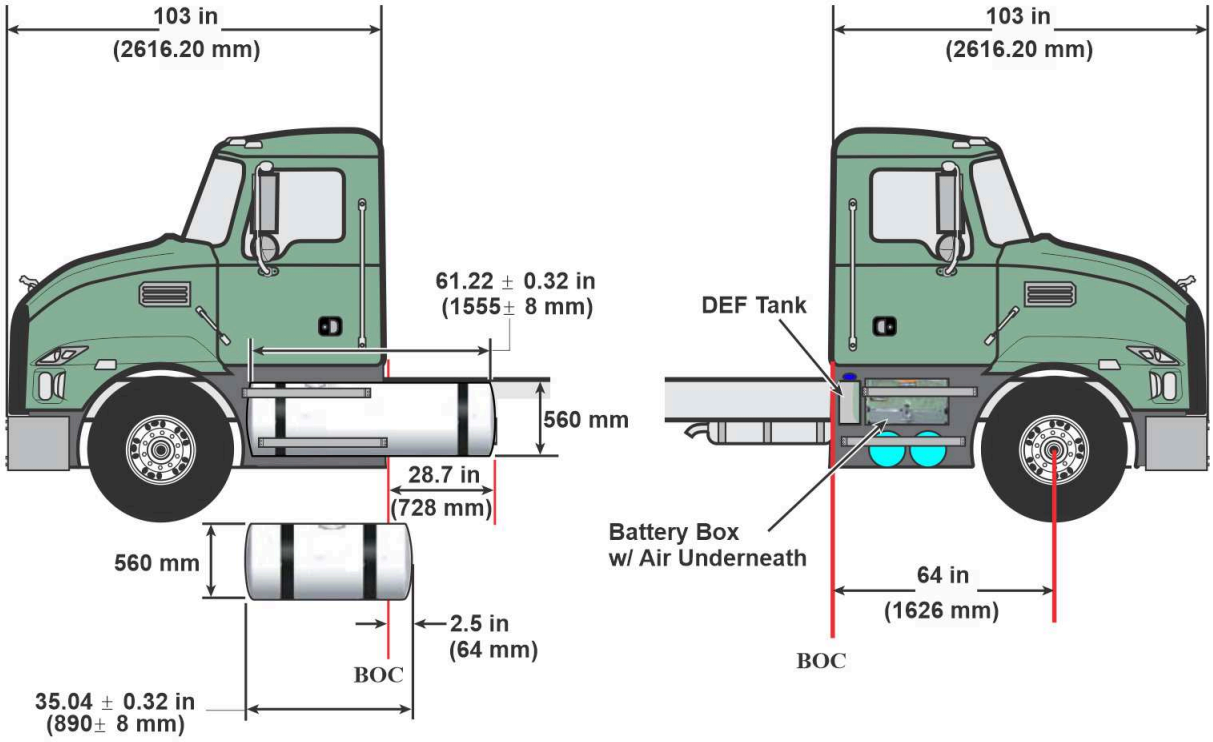

T0159139

Note: The information is accurate as known as of the date of the publication. Illustrations may not be representative of the current product. Mack Trucks, Inc. reserves the right to make changes in specifications, equipment or design or to discontinue models or options without notice at any time.

Round Shape 22” Left-Hand Fuel Tanks			
Fuel Tank Volume	Fuel Tank Diameter	Fuel Tank Length	Length of tank from BOC
50 gal (190 L)	22 in. (560 mm)	35 in. (890 mm)	2.5 in. (64 mm)
90 gal (340 L)	22 in. (560 mm)	61.2 in. (1555 mm)	28.7 in. (728 mm)

Notes

All Rights Reserved

MMD Generation 2, 4x2 Dimensions/Configurations

(Trucks built from week 01, 2025)

Acceptable vehicle applications include: on-highway, local pick-up and delivery, refrigerated goods delivery, flat bed and stake, dump, refuse and equipment haulers.

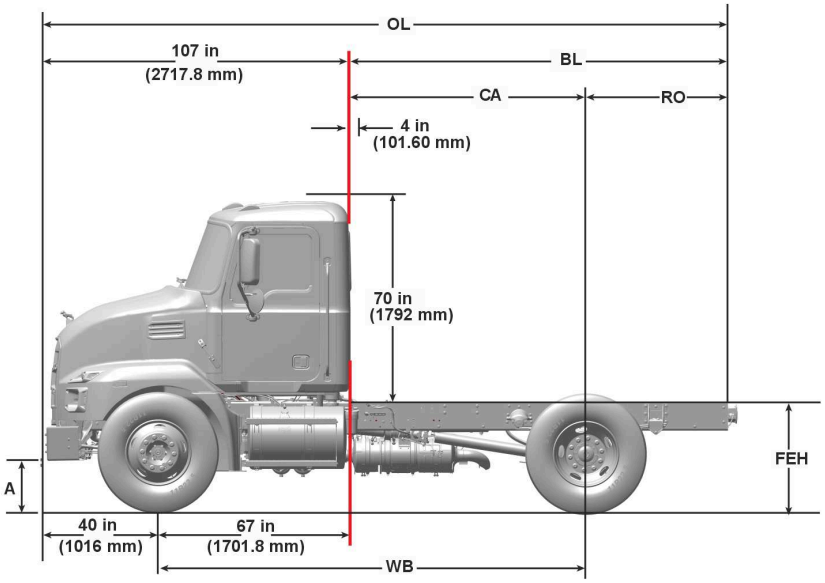

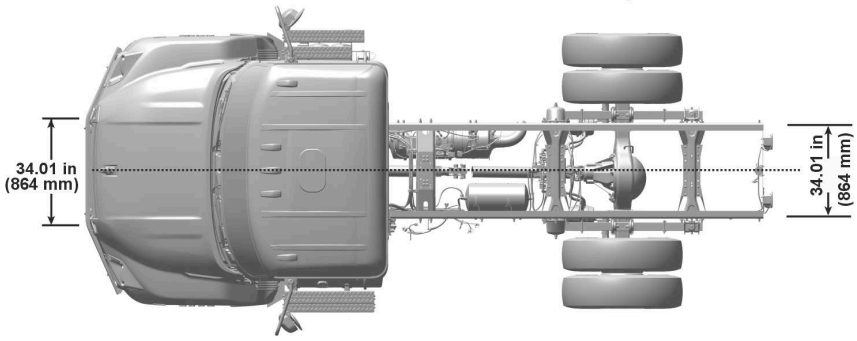



T0208749

All Rights Reserved

MD6/MD7, Class-6/Class-7										
Typical Dry Van Body Length[1] (ft.)			12	14	16	18	20	22	24	26	28
Wheelbase[2] (WB) in inches (mm)			151 (3835)	175 (4445)	187 (4750)	205 (5207)	217 (5512)	235 (5969)	255 (6477)	274 (6960)	287 (7290)
Bumper-to-Back-Of-Cab in inches (mm)			107 (2718)	107 (2718)	107 (2718)	107 (2718)	107 (2718)	107 (2718)	107 (2718)	107 (2718)	107 (2718)
Bumper-to-Front Axle in inches (mm)			40 (1016)	40 (1016)	40 (1016)	40 (1016)	40 (1016)	40 (1016)	40 (1016)	40 (1016)	40 (1016)
Cab to Rear Axle (CA) in inches (mm)			84 (2134)	108 (2743)	120 (3048)	138 (3505)	150 (3810)	168 (4267)	188 (4775)	207 (5257)	220 (5588)
Rear Overhang Chassis (RO) in inches (mm)			50 (1270)	60 (1524)	70 (1778)	75 (1905)	85 (2159)	90 (2286)	95 (2413)	100 (2540)	85 (2159)
Back-Of-Cab to End of Frame (BL) in inches (mm)			134 (3404)	168 (4267)	190 (4826)	213 (5410)	235 (5969)	258 (6553)	283 (7188)	307 (7798)	305 (7747)
Overall Length Chassis only (OL) in inches (mm)			241 (6121)	275 (6985)	297 (7544)	320 (8128)	342 (8687)	365 (9271)	390 (9906)	414 (10516)	412 (10465)
Frame End Height (FEH) in inches (mm)	**Unladen**		40.5 (1029)								
	Laden		38.3 (972)								
Bumper-to-Ground (A) in inches (mm)			17.5 (444)								
Length of rear suspension from center of axle in inches (mm)	**Leaf suspension**	**X**	28.5 (723)								
		Y	28.9 (735)								
	Air suspension	**X**	26.4 (670)								
		Y	32.1 (735)								
Rear suspension full length in inches (mm)	**Leaf suspension**	**Z**	57.4 (1459)								
	Air suspension	**Z**	58.5 (1486)								

1 Typical van body lengths assume level load to maximize GVWR. No specific consideration taken for driver, passengers, or fuel addition of ancillary equipment such as lift gates and refrigeration units not considered in calculations.

2 Wheelbase selection should be based on specific weight distribution.

All Rights Reserved

Back of Cab and Fuel Tank Dimensions Conventional

BOC and Fuel Tank Dimensions

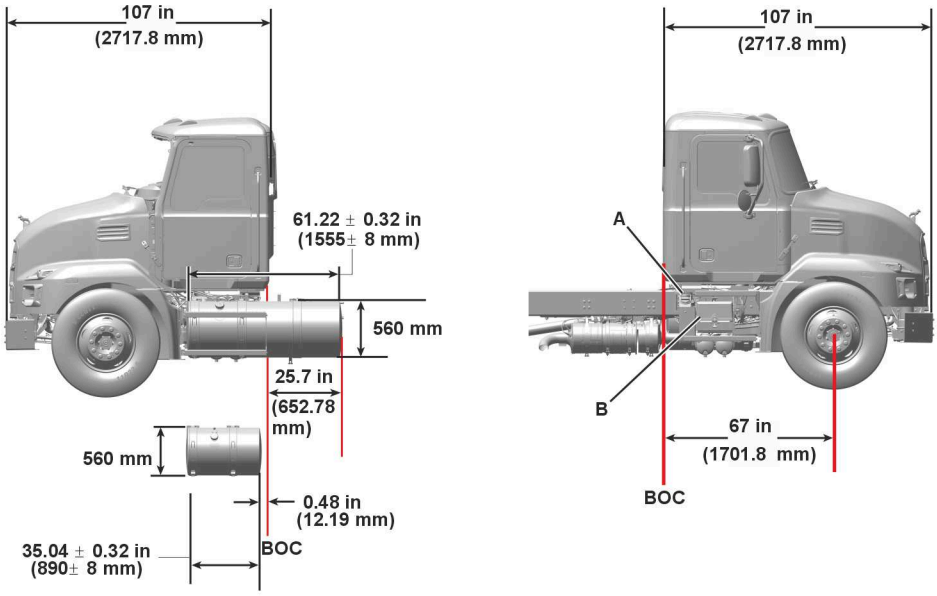

T0208750

A. DEF Tank
B. Battery Box (with air tank underneath)
BOC (Back of Cab)

Note: The information provided is accurate as of the publication date. Illustrations may not be accurately represent the current product. Mack Trucks, Inc. reserves the right to make changes to specifications, equipment, design or to discontinue models or options without prior notice at any time.

Round Shape 22” Left-Hand Fuel Tanks			
Fuel Tank Volume	Fuel Tank Diameter	Fuel Tank Length	Length of tank from BOC
50 gal (190 L)	22 in. (560 mm)	35 in. (890 mm)	0.48 in. (12.19 mm)
90 gal (340 L)	22 in. (560 mm)	61.2 in. (1555 mm)	25.7 in. (652.78 mm)

Notes

All Rights Reserved

All Rights Reserved