WIRING DIAGRAM INDEX

NAME	DESCRIPTION	PAGE
AA	POWER DISTRIBUTION FRC 1/2	2
AB	POWER DISTRIBUTION FRC 2/2	3
AC	POWER DISTRIBUTION EFRC 1/2	4
AD	POWER DISTRIBUTION EFRC 2/2	5
AE	GROUNDING	6
AF	STARTING AND CHARGING	7
AG	VEHICLE ECU 1/3 EMS POWER CONTROL	8
AH	VEHICLE ECU 2/3	9
AI	VEHICLE ECU 3/3	10
AJ	VECU, PTO AND PDLO SWITCHES	11
AM	STARTING AND CHARGING, ISX-G WITH IN FRA	12
AQ	POWER DISTRIBUTION / KEY SWITCH	13
BA	INSTRUMENT CLUSTER 1/2	14
BB	INSTRUMENT CLUSTER 2/2	15
BE	PEOPLENET	16
BF	QUALCOMM	17
BG	TELEMATICS GATEWAY (TGW)	18
BH	ALLISON BODY BUILDER INTERFACE	19
BI	BODY BUILDER CAB INTERFACE	20
BK	BODYBUILDER BODYLINK	21
BL	BATTERY BUSSING	22
BN	BODYBUILDER TURNPIKE	23
BP	ISX-G FUEL SYSTEM	24
BY	TMC RP 1226 CONNECTORS	25
CA	ENGINE HEATER	26
CB	ENGINE CONTROL MACK ENGINE	27
CF	CARB 2024	28
CL	ENGINE CONTROL ISX-G	29
CM	METHANE DETECTION	30
CN	UREA DOSING SYSTEM - MACK ENGINE OBD 201	31
DA	TRANSMISSION MDRIVE	32
DB	TRANSMISSION CONTROL - ULTRASHIFT	33
DE	TRANSMISSION CONTROL ALLISON 1/2	34
DF	ALLISON TRANSMISSION CONTROLS 2/2	35
DP	MDRIVE DUAL PTO	36
EA	ABS CONTROL WABCO	37
EB	SUSPENSION ECU 6X2	38
EC	ABS CONTROL BENDIX	39
ED	ABS CONTROL BENDIX ECS	40
FA	AIR DRYER/HEATED DRAIN VALVE	41
FD	CHASSIS SOLENOIDS 1/2	42
FE	CHASSIS SOLENOIDS 2/2	43
FG	TIRE PRESSURE MONITOR	44
FH	MACK COMMAND STEERING	45
GA	LIGHTING CONTROL 1/2	46
GB	LIGHTING CONTROL 2/2	47
GC	CLEARANCE LAMPS	48
GD	DRIVING/SIGNAL LIGHTS: AERO OR CONSTRUC	49
GE	LIGHTING FORWARD SIGNAL: CLASSIC	50
GF	TAIL LAMPS W/ ALARM	51
GG	LIGHT CONTROL - BACK UP LAMPS	52
GH	SIDE REPEATER/MARKER OPTIONS	53

NAME	DESCRIPTION	PAGE
GI	SNOW PLOW PREP	54
GJ	BEACON LAMPS	55
GK	HOOK UP LAMPS	56
GL	FOG LIGHTS	57
GM	DRIVING/SIGNAL LIGHTS:CONSTRUC	58
GP	WINSHIELD WIPER/WASHER	59
GQ	HORN	60
HA	CLIMATE CONTROL	61
HB	SLEEPER CLIMATE CONTROL W/LECM 70" SLEE	62
HC	SHORE POWER W/O INVERTER	63
HD	SLEEPER FUNCTIONS W/O LECM 48 INCH BASI	64
HE	LIGHTING AND POWER OUTLETS 70" SLEEPER	65
HF	SLEEPER COURTESY AND UNDER BUNK	66
HH	SLEEPER PIPE LIGHTING SWITCH	67
HI	SHORE POWER W/INVERTER	68
HJ	AUXILLIARY 12V PARK COOLING SYSTEM	69
HK	APADS	70
HL	SLEEPER CLIMATE CONTROL W/LECM 48" SLEEP	71
HM	LIGHTING AND POWER OUTLETS 48" SLEEPER	72
IA	COURTESY LIGHTS - DRIVING COMPARMENT	73
IB	COURTESY LIGHTS - DAYCAB AND HOS SLEEPER	74
IC	COURTESY LIGHTS - 48" SLEEPER	75
ID	COURTESY LIGHTS - 70" SLEEPER	76
IF	POWER WINDOWS/MIRRORS/LOCKS	77
IG	REMOTE DOOR LOCKING	78
IH	BRIGHTWORK	79
IJ	HEATED SEATS/SEATBELT REMINDER/HEATED WI	80
IK	CIGAR LIGHTER / AUX POWER	81
JA	SEAT SRS	82
JE	ADAPTIVE CRUISE CONTROL	83
JF	LANE CHANGE SUPPORT SYSTEM	84
JG	LANE DEPARTURE WARNING -DAYCAB AND 48" S	85
JH	LANE DEPARTURE WARNING - 70 " SLEEPER	86
KA	AUDIO SYSTEM - DAYCAB	87
KB	AUDIO SYSTEM - SLEEPERS	88
KC	AUDIO SYSTEM SPEAKER OUTPUTS W/ AMPLIFIE	89
KD	AUDIO SYSTEM - BLUETOOTH	90
KL	INFOTAINMENT AUDIO SYSTEM 1/2	91
KM	INFOTAINMENT AUDIO SYSTEM 2/2	92
MA	TRAILER CABLE	93
MB	TRAILER CABLE OPTIONS	94
MC	TRAILER CABLES OPTIONS	95
MD	CENTER PIN HOT	96
NA	SPARE SWITCHES AND AUXSW-6 OPTION	97
NB	SPARE SWITCHES - AUXS-8BB	98
NC	SPARE SWITCHES - BBM-PK16	99
ND	TAILGATE LIFT POWER	100
XA	DIAGNOSTICS 1/4 (DL4 - J1587 & DL2 - J22	101
XB	DIAGNOSTICS 2/4 (CAB DL1 - J1939)	102
XC	DIAGNOSTICS 3/4 (CHASSIS DL1 - J1939)	103
XD	DIAGNOSTICS 4/4 (CHASSIS DL1 - 1939)	104
XF	DIAGNOSTICS CUMMINS (DL10)	105

The copying, distribution and utilization of this document as well as the communication of its contents to others without expressed authorization is prohibited. Offenders will be held liable for payment of damages. All rights reserved in the event of the grant of a patent, utility model or ornamental design registration.

Document title

WIRING DIAGRAM, 12V MACK CONVENTIONAL

VOLVO

Group Trucks Technology

The legal owner of this document is as stated under "Design Location" in KOLA and in the associated "Part Version Report"

Document type

PRODUCT SCHEMATICS

Document No	Issue	Volume	Sheet No
23970505	03	1 (1)	1 (105)

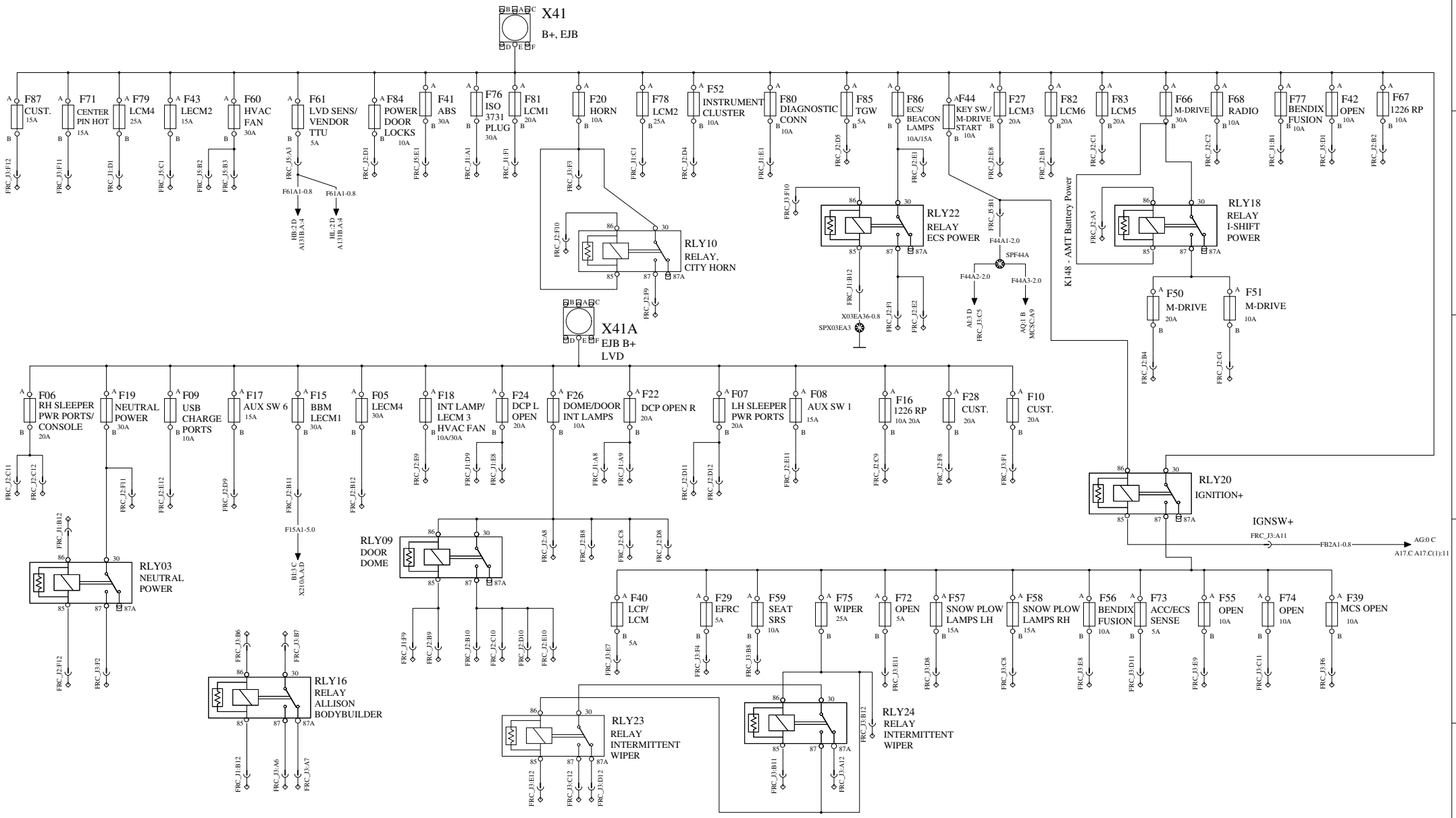

Volvo Truck Corporation	Document title WIRING DIAGRAM, 12V MACK CONVENTIONAL Document type PRODUCT SCHEMATIC	Document No 23970505	Issue 03	Volume 1 (1)	Page 2 (105)

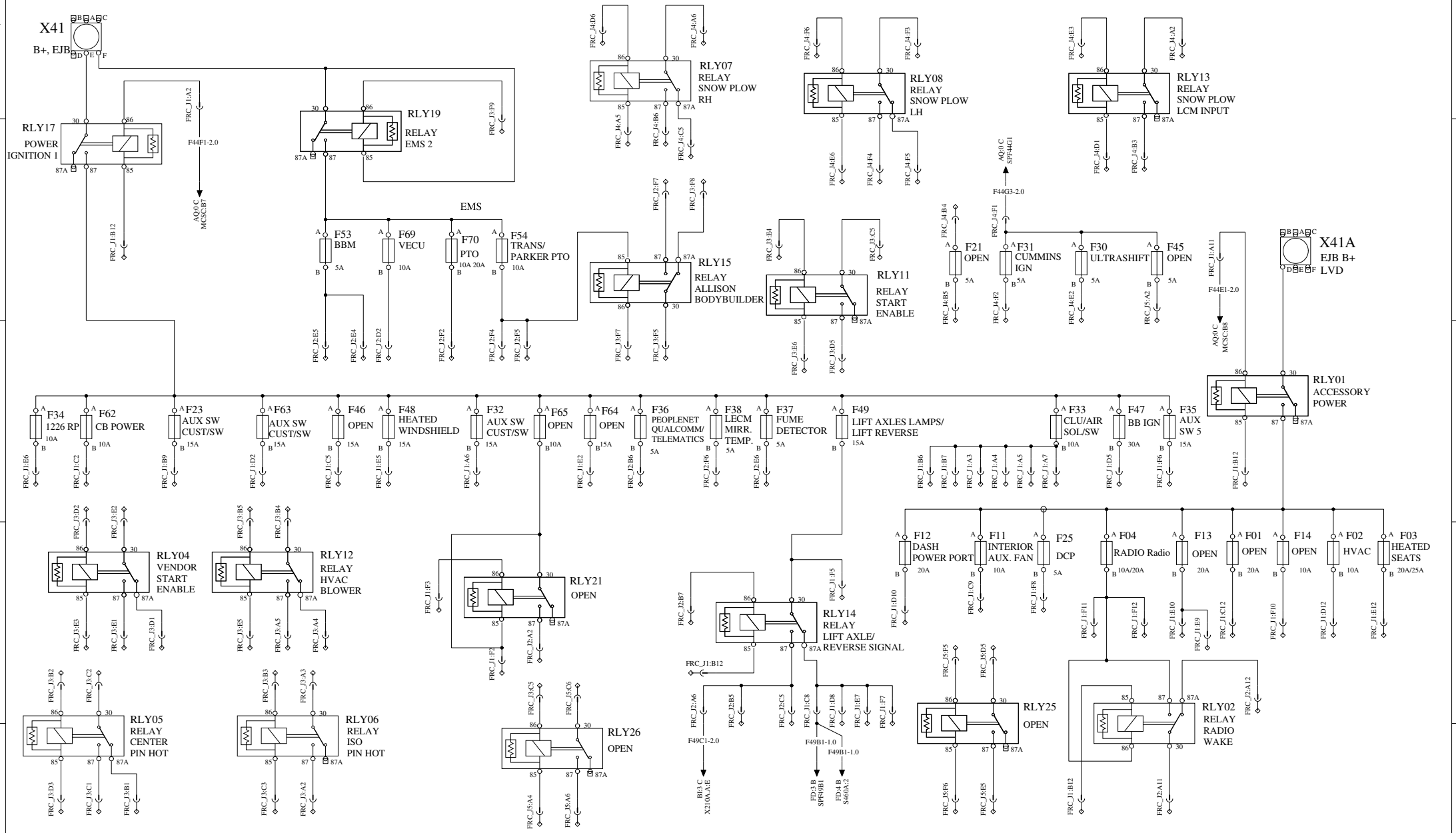

Volvo Truck Corporation	Document title WIRING DIAGRAM, 12V MACK CONVENTIONAL Document type PRODUCT SCHEMATIC	Document No 23970505	Issue 03	Volume 1 (1)	Page 3 (105)

POWER DISTRIBUTION EFRC 1/2

WIRING DIAGRAM: AC

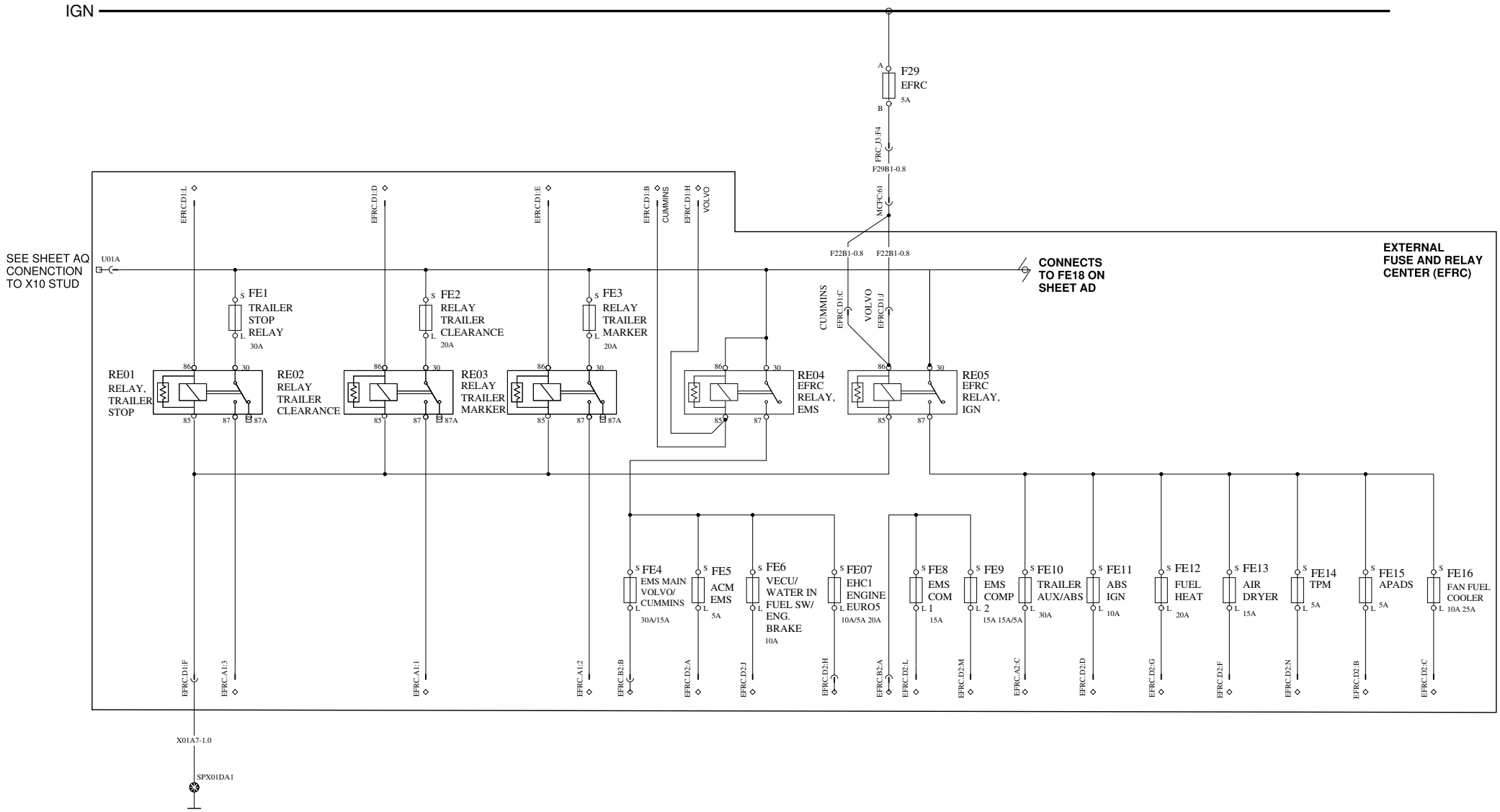

	Document title	Document No	Issue	Volume	Page
Volvo Truck Corporation	WIRING DIAGRAM, 12V MACK CONVENTIONAL Document type PRODUCT SCHEMATIC	23970505	03	1 (1)	4 (105)

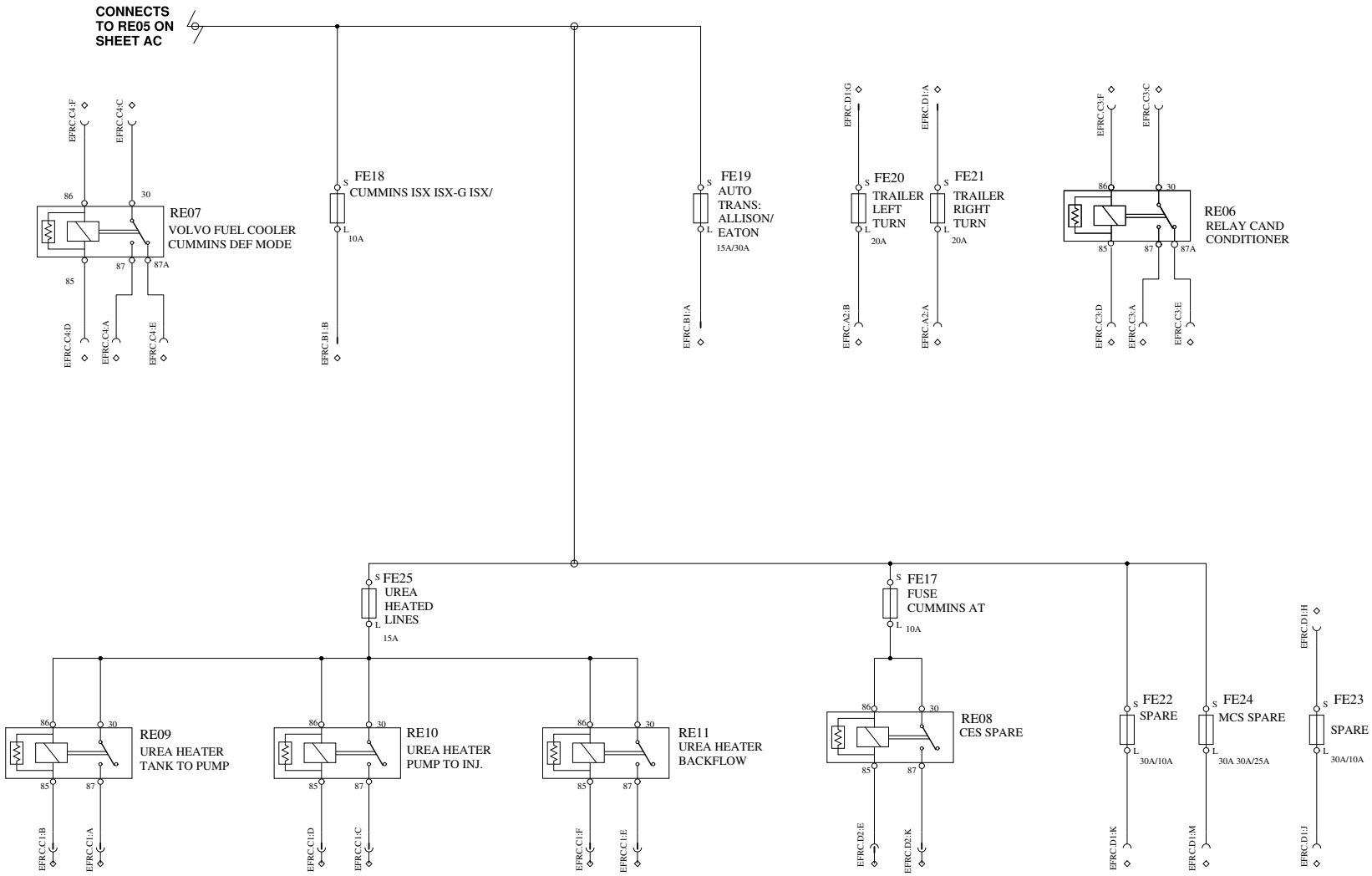

Volvo Truck Corporation	Document title WIRING DIAGRAM, 12V MACK CONVENTIONAL Document type PRODUCT SCHEMATIC	Document No 23970505	Issue 03	Volume 1 (1)	Page 5 (105)

GROUNDING

WIRING DIAGRAM: AE

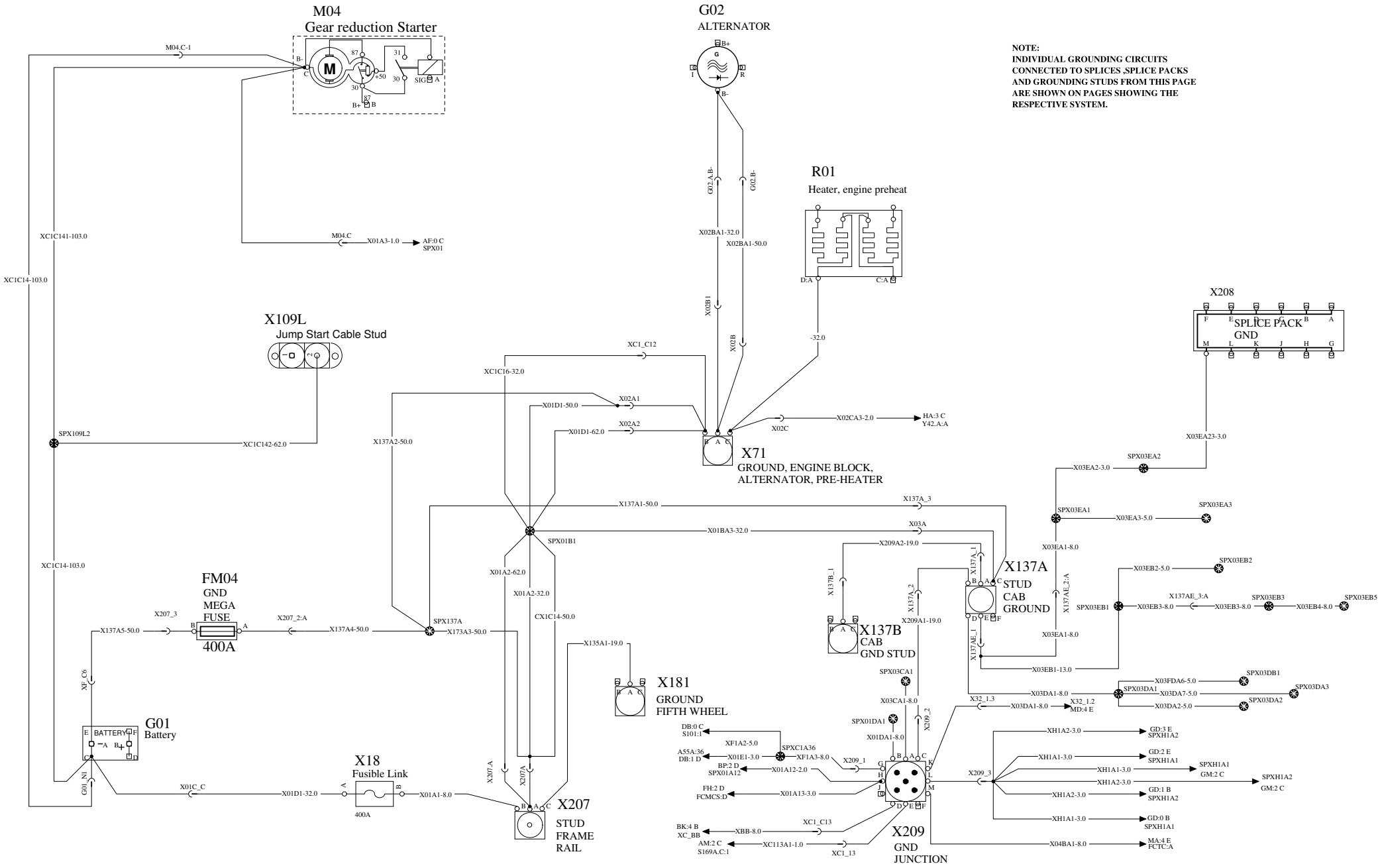

NOTE:
INDIVIDUAL GROUNDING CIRCUITS CONNECTED TO SPLICES ,SPLICE PACKS AND GROUNDING STUDS FROM THIS PAGE ARE SHOWN ON PAGES SHOWING THE RESPECTIVE SYSTEM.

Volvo Truck Corporation	Document title WIRING DIAGRAM, 12V MACK CONVENTIONAL Document type PRODUCT SCHEMATIC	Document No 23970505	Issue 03	Volume 1 (1)	Page 6 (105)

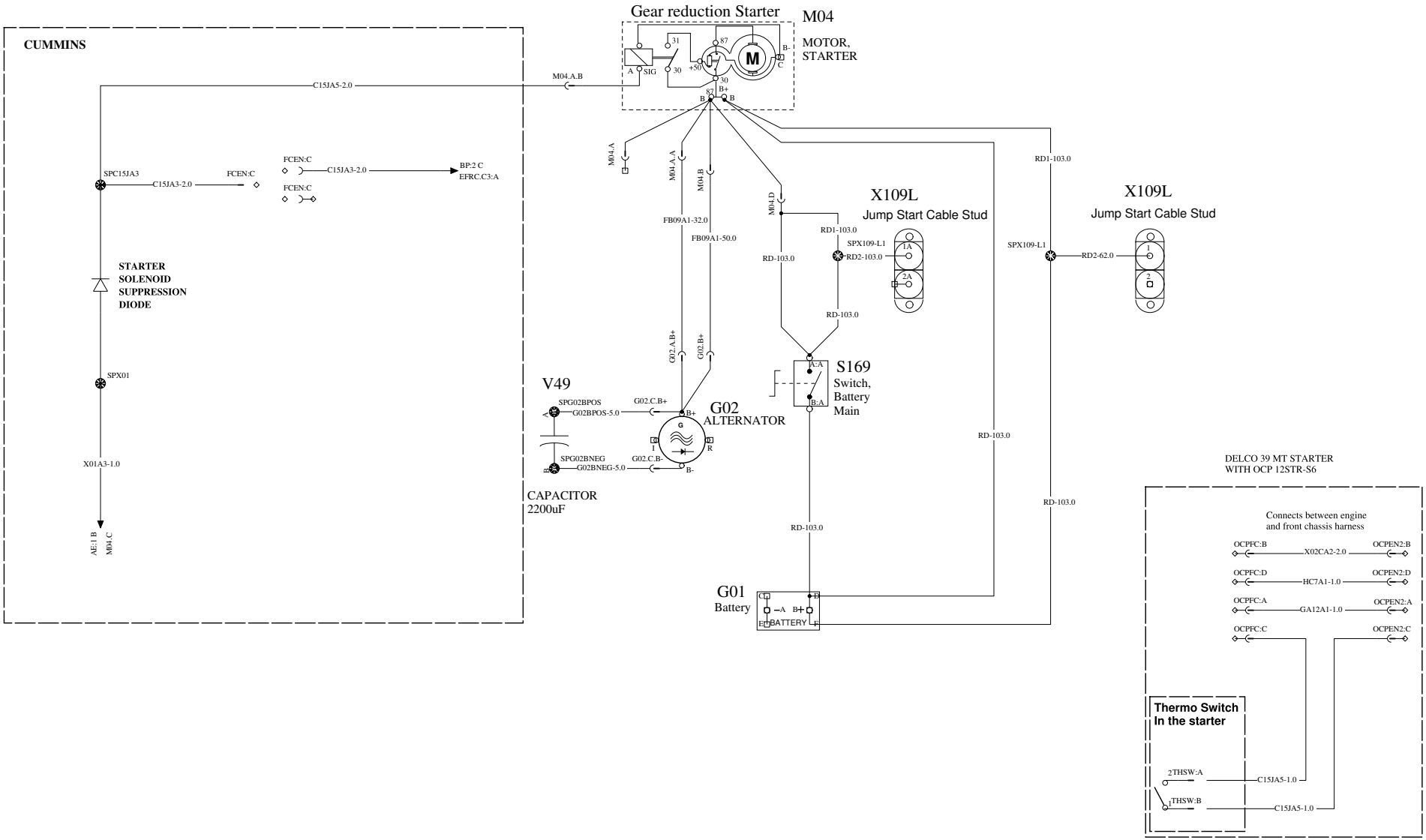

Volvo Truck Corporation	Document title WIRING DIAGRAM, 12V MACK CONVENTIONAL Document type PRODUCT SCHEMATIC	Document No 23970505	Issue 03	Volume 1 (1)	Page 7 (105)

VEHICLE ECU 1/3 EMS POWER CONTROL

WIRING DIAGRAM: AG

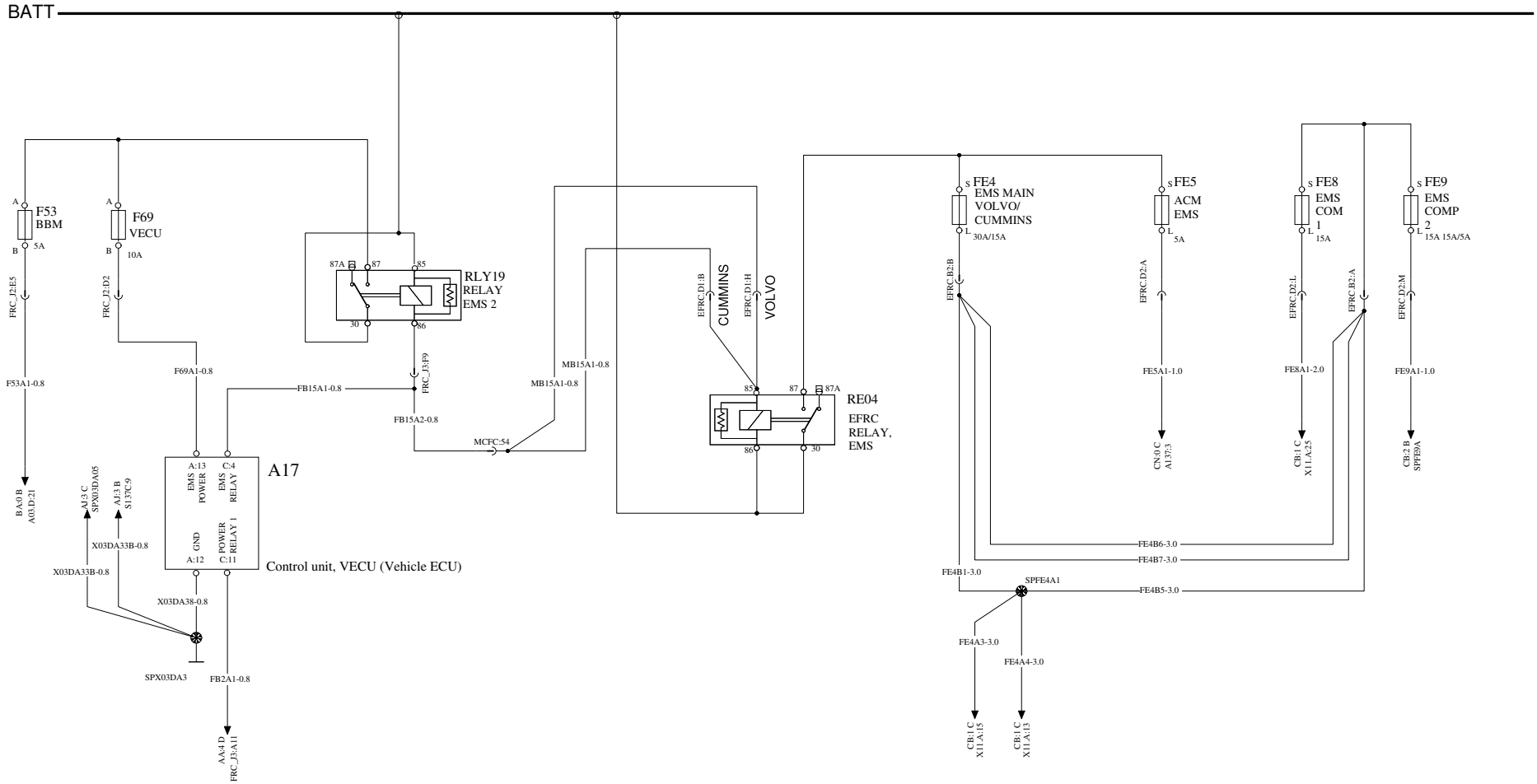

	Document title	Document No	Issue	Volume	Page
Volvo Truck Corporation	WIRING DIAGRAM, 12V MACK CONVENTIONAL Document type PRODUCT SCHEMATIC	23970505	03	1 (1)	8 (105)

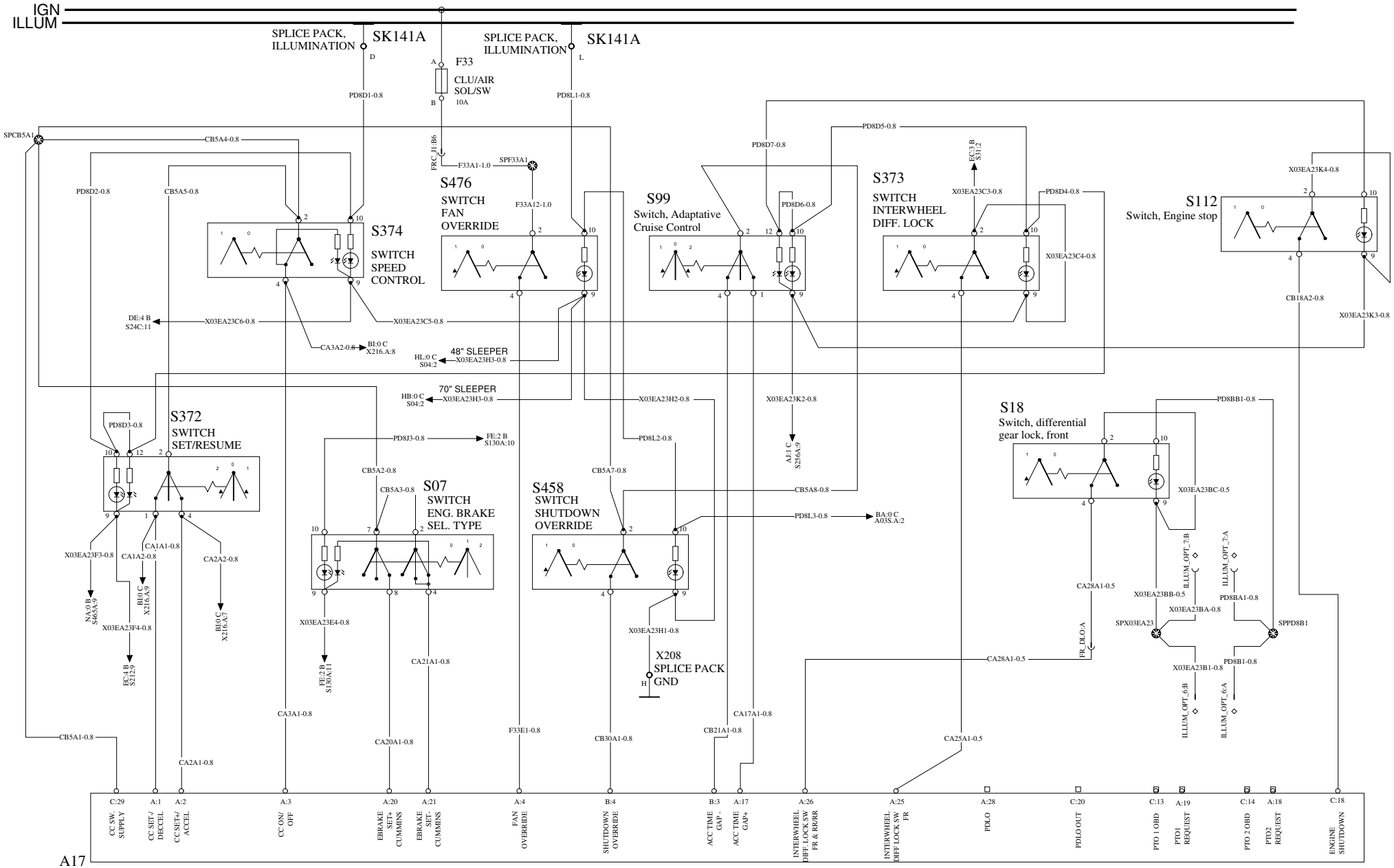

Volvo Truck Corporation	Document title: WIRING DIAGRAM, 12V MACK CONVENTIONAL Document type: PRODUCT SCHEMATIC	Document No: 23970505	Issue: 03	Volume: 1 (1)	Page: 9 (105)

VEHICLE ECU 3/3

WIRING DIAGRAM: AI

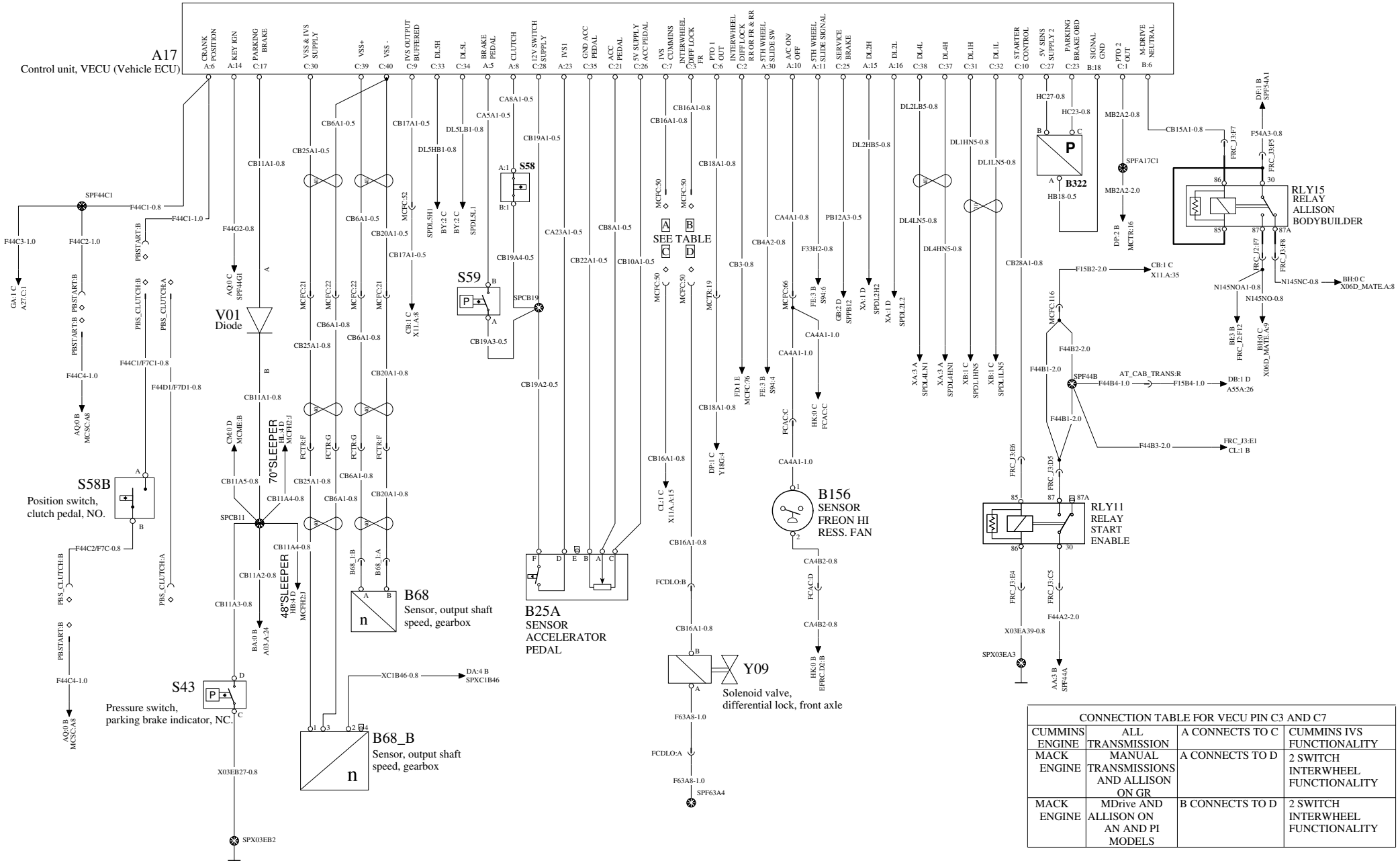

CONNECTION TABLE FOR VECU PIN C3 AND C7			
CUMMINS ENGINE	ALL TRANSMISSION	A CONNECTS TO C	CUMMINS IVS FUNCTIONALITY
MACK ENGINE	MANUAL TRANSMISSIONS AND ALLISON ON GR	A CONNECTS TO D	2 SWITCH INTERWHEEL FUNCTIONALITY
MACK ENGINE	MDrive AND ALLISON ON AN AND PI MODELS	B CONNECTS TO D	2 SWITCH INTERWHEEL FUNCTIONALITY

Volvo Truck Corporation	Document title: WIRING DIAGRAM, 12V MACK CONVENTIONAL Document type: PRODUCT SCHEMATIC	Document No: 23970505	Issue: 03	Volume: 1 (1)	Page: 10 (105)

VECU, PTO AND PDLO SWITCHES

WIRING DIAGRAM: AJ

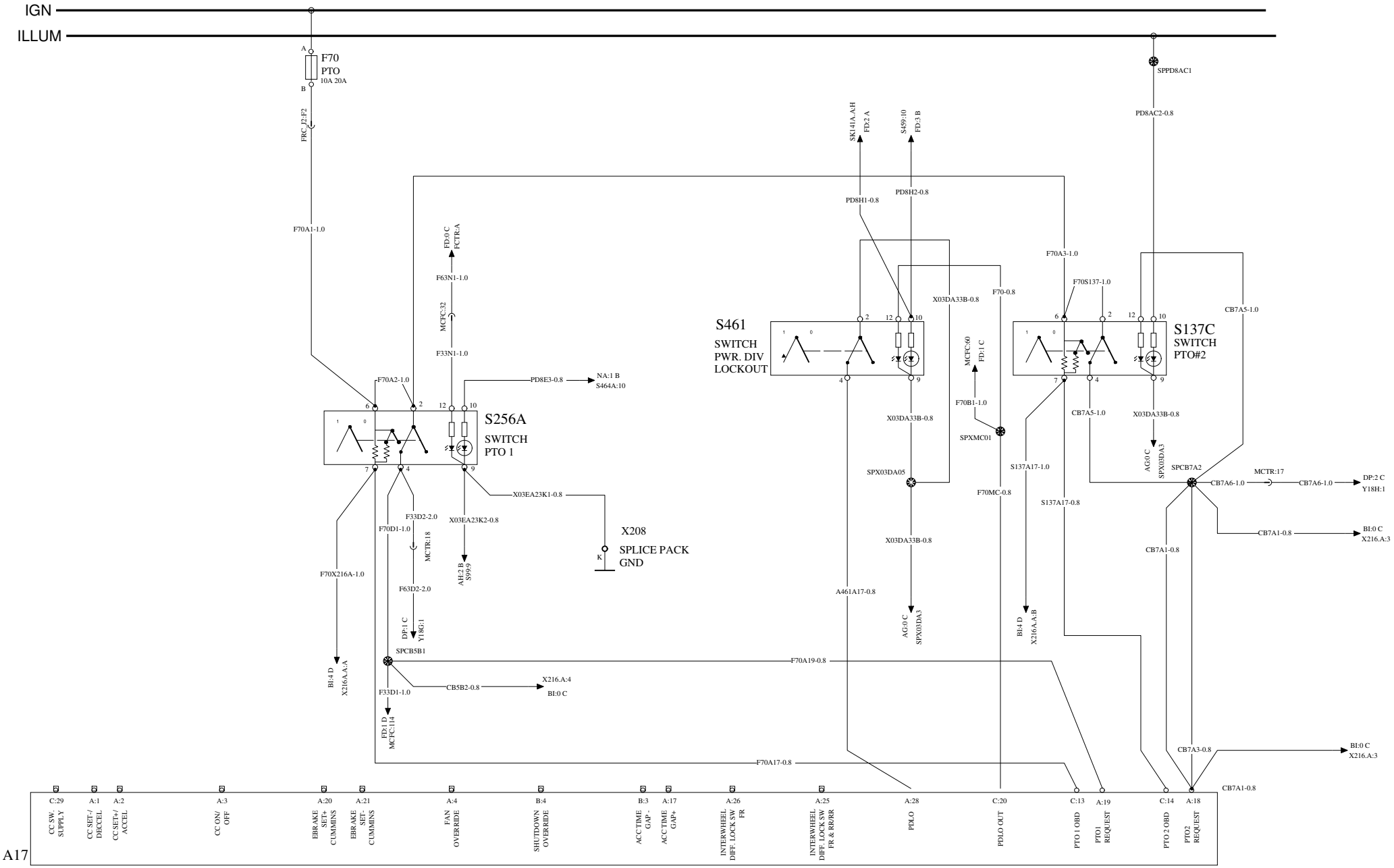

	Document title	Document No	Issue	Volume	Page
Volvo Truck Corporation	WIRING DIAGRAM, 12V MACK CONVENTIONAL Document type PRODUCT SCHEMATIC	23970505	03	1 (1)	11 (105)

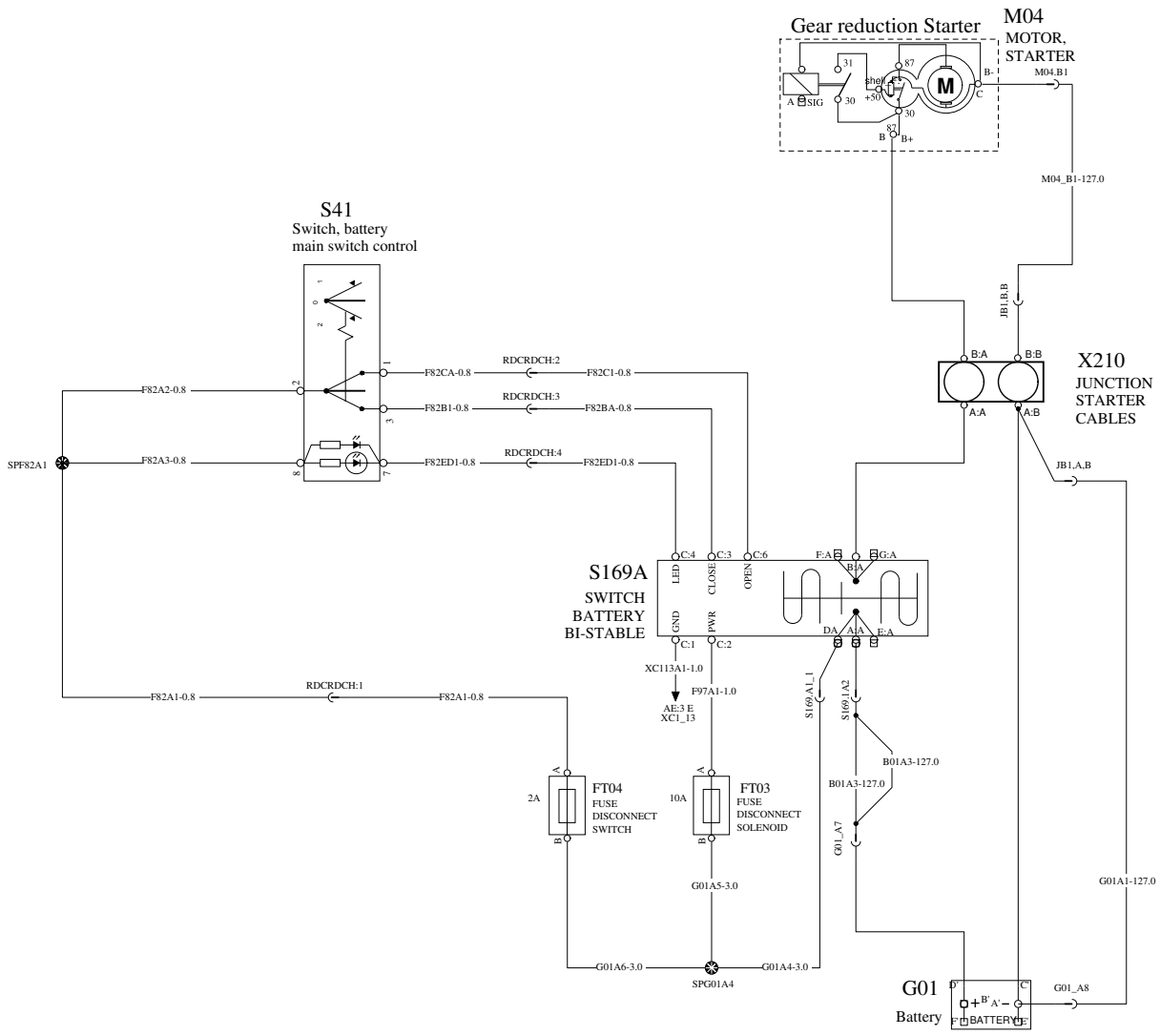

Volvo Truck Corporation	Document title: WIRING DIAGRAM, 12V MACK CONVENTIONAL Document type: PRODUCT SCHEMATIC	Document No: 23970505	Issue: 03	Volume: 1 (1)	Page: 12 (105)

POWER DISTRIBUTION / KEY SWITCH

WIRING DIAGRAM: AQ

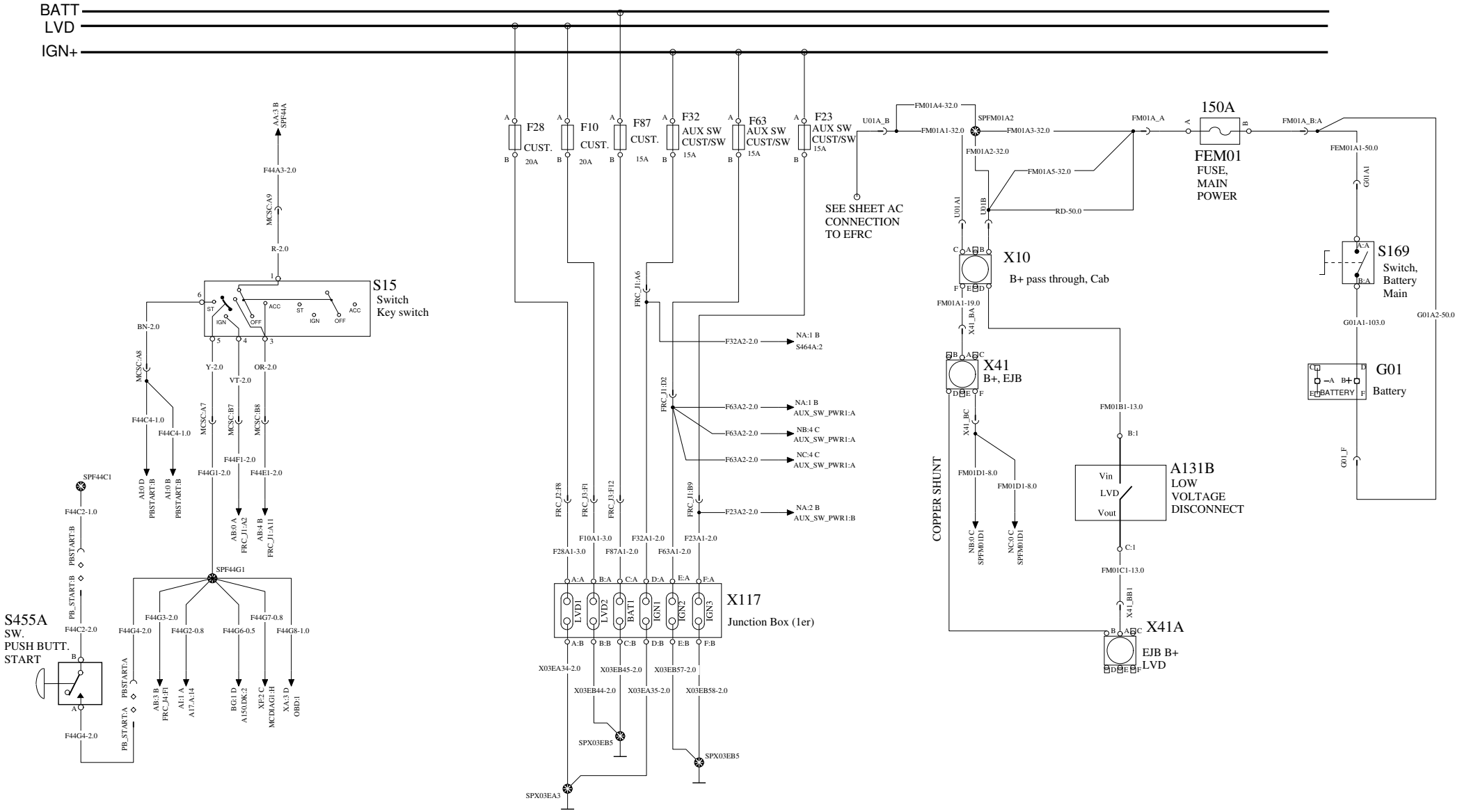

Volvo Truck Corporation	Document title WIRING DIAGRAM, 12V MACK CONVENTIONAL Document type PRODUCT SCHEMATIC	Document No 23970505	Issue 03	Volume 1 (1)	Page 13 (105)

INSTRUMENT CLUSTER 1/2

WIRING DIAGRAM: BA

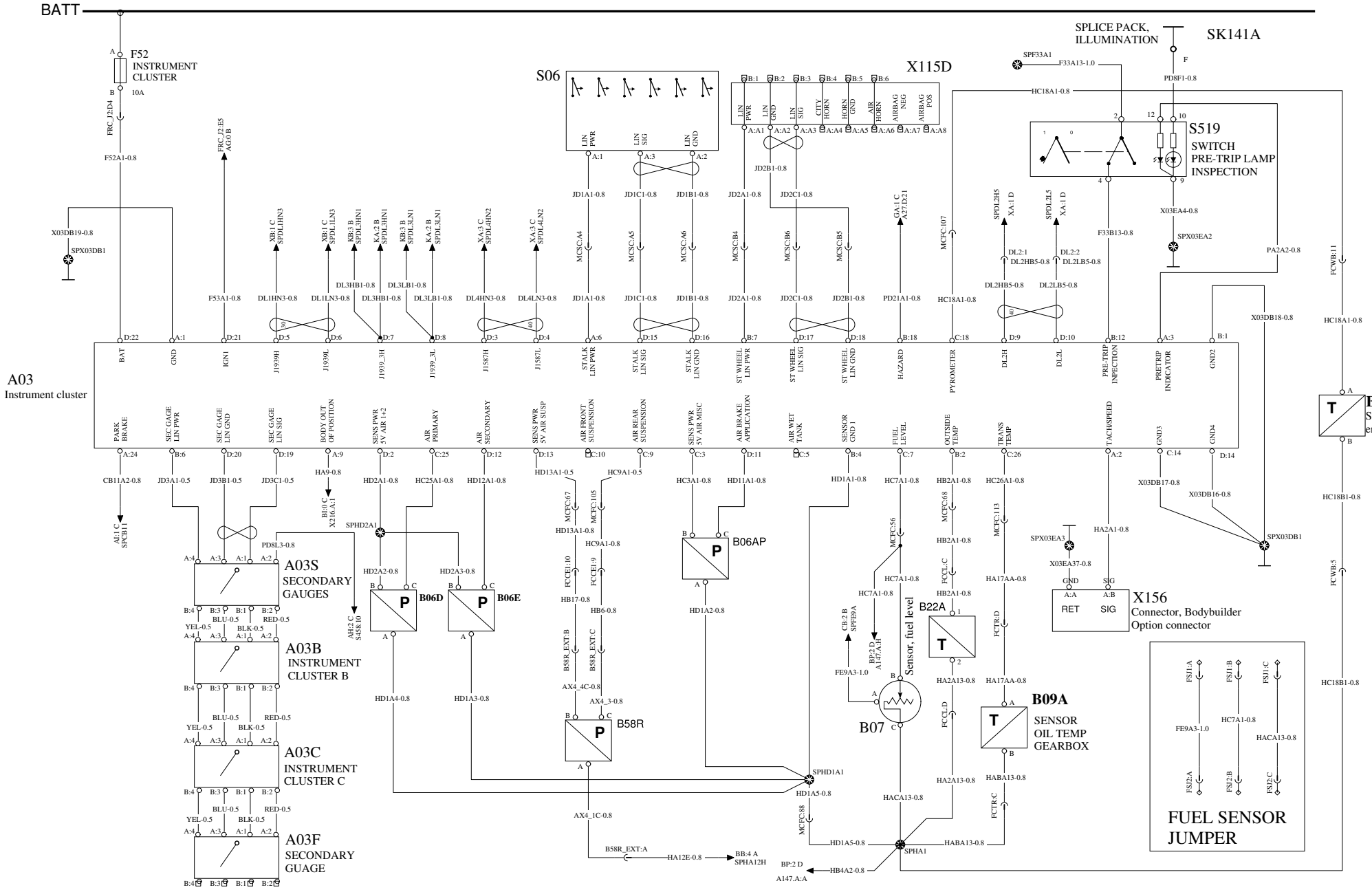

Volvo Truck Corporation	Document title: WIRING DIAGRAM, 12V MACK CONVENTIONAL Document type: PRODUCT SCHEMATIC	Document No: 23970505	Issue: 03	Volume: 1 (1)	Page: 14 (105)

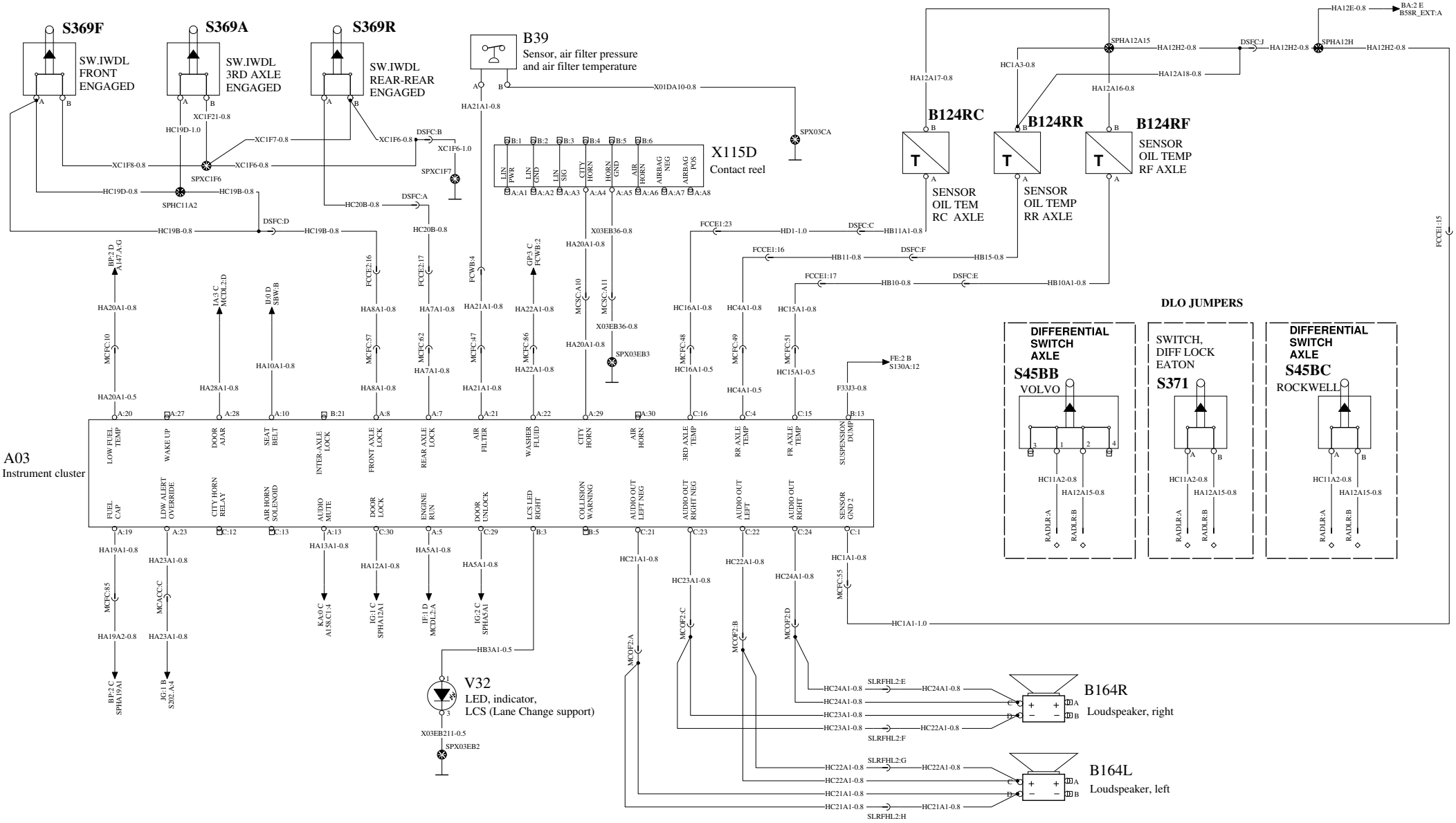

Volvo Truck Corporation	Document title: WIRING DIAGRAM, 12V MACK CONVENTIONAL Document type: PRODUCT SCHEMATIC	Document No: 23970505	Issue: 03	Volume: 1 (1)	Page: 15 (105)

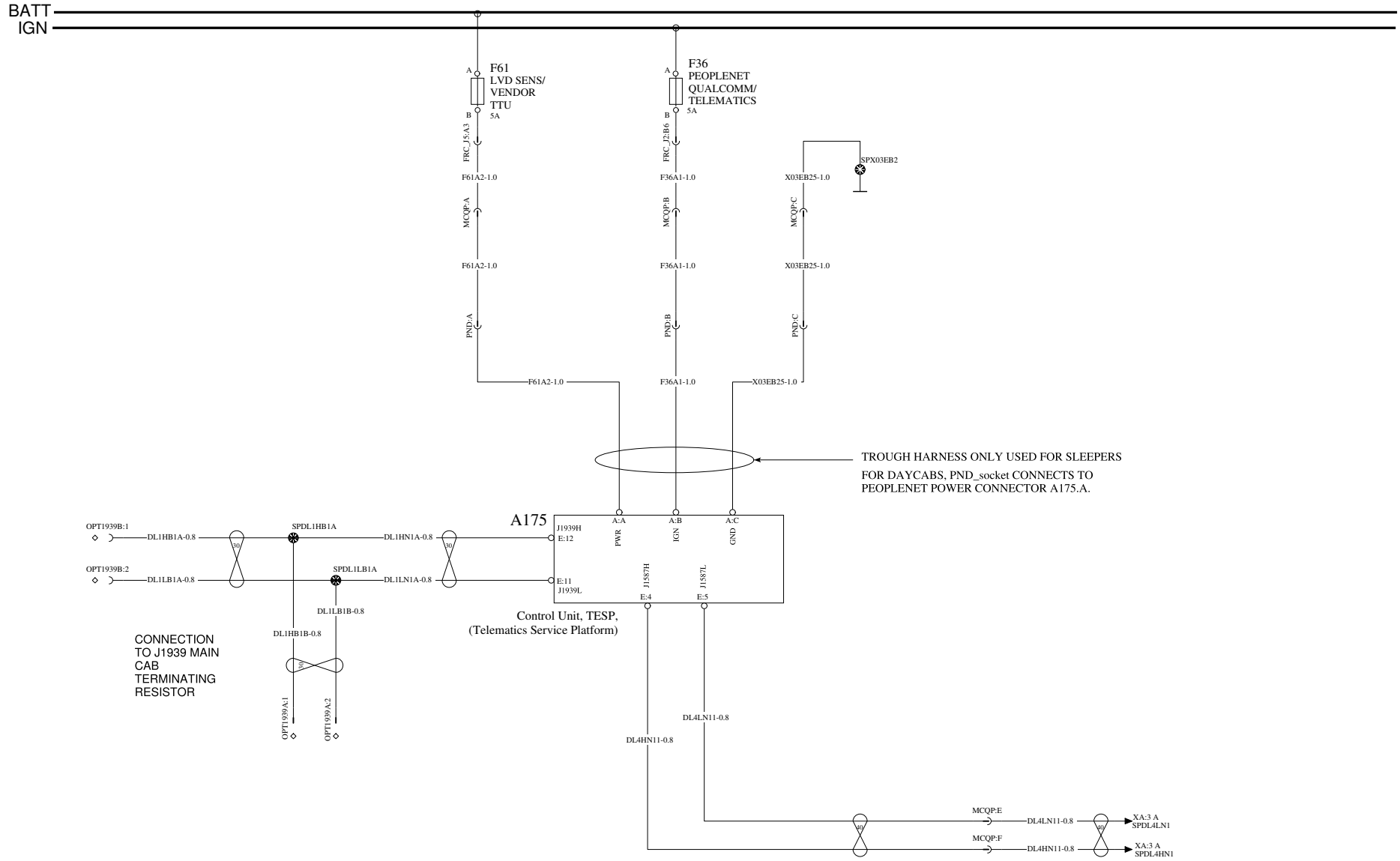

Volvo Truck Corporation	Document title WIRING DIAGRAM, 12V MACK CONVENTIONAL Document type PRODUCT SCHEMATIC	Document No 23970505	Issue 03	Volume 1 (1)	Page 16 (105)

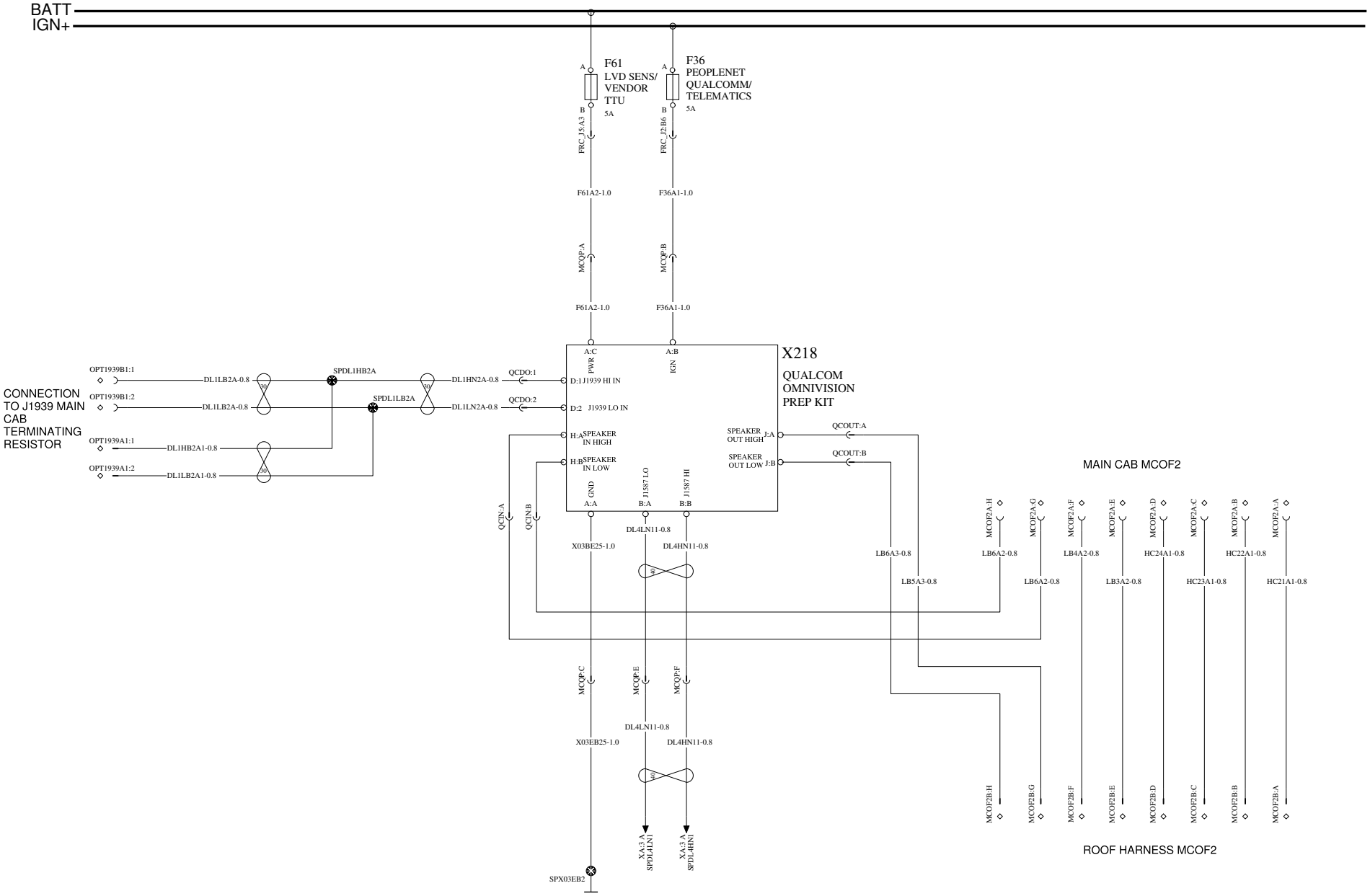

Volvo Truck Corporation	Document title WIRING DIAGRAM, 12V MACK CONVENTIONAL Document type PRODUCT SCHEMATIC	Document No 23970505	Issue 03	Volume 1 (1)	Page 17 (105)

TELEMATICS GATEWAY (TGW)

WIRING DIAGRAM: BG

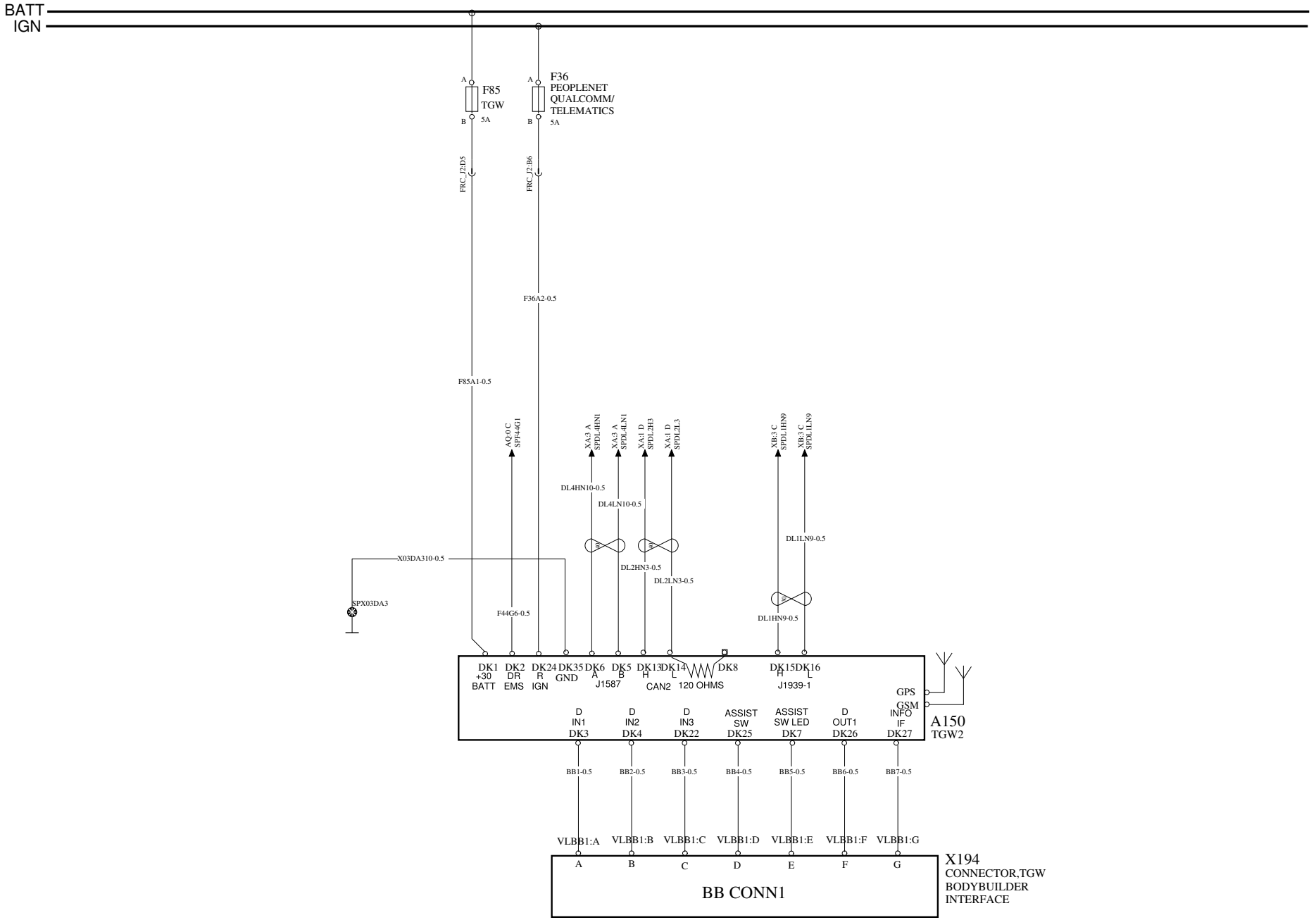

Volvo Truck Corporation	Document title WIRING DIAGRAM, 12V MACK CONVENTIONAL Document type PRODUCT SCHEMATIC	Document No 23970505	Issue 03	Volume 1 (1)	Page 18 (105)

ALLISON BODY BUILDER INTERFACE

WIRING DIAGRAM: BH

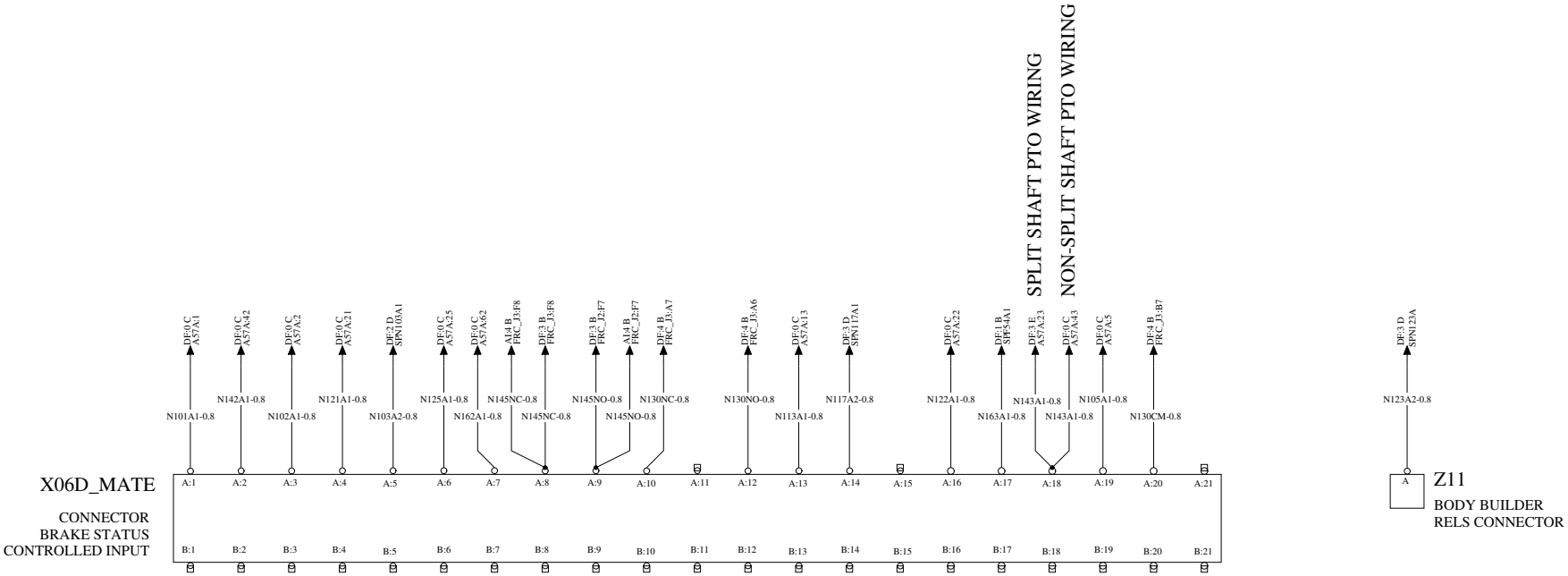

Volvo Truck Corporation	Document title WIRING DIAGRAM, 12V MACK CONVENTIONAL Document type PRODUCT SCHEMATIC	Document No 23970505	Issue 03	Volume 1 (1)	Page 19 (105)

BODY BUILDER CAB INTERFACE

WIRING DIAGRAM: BI

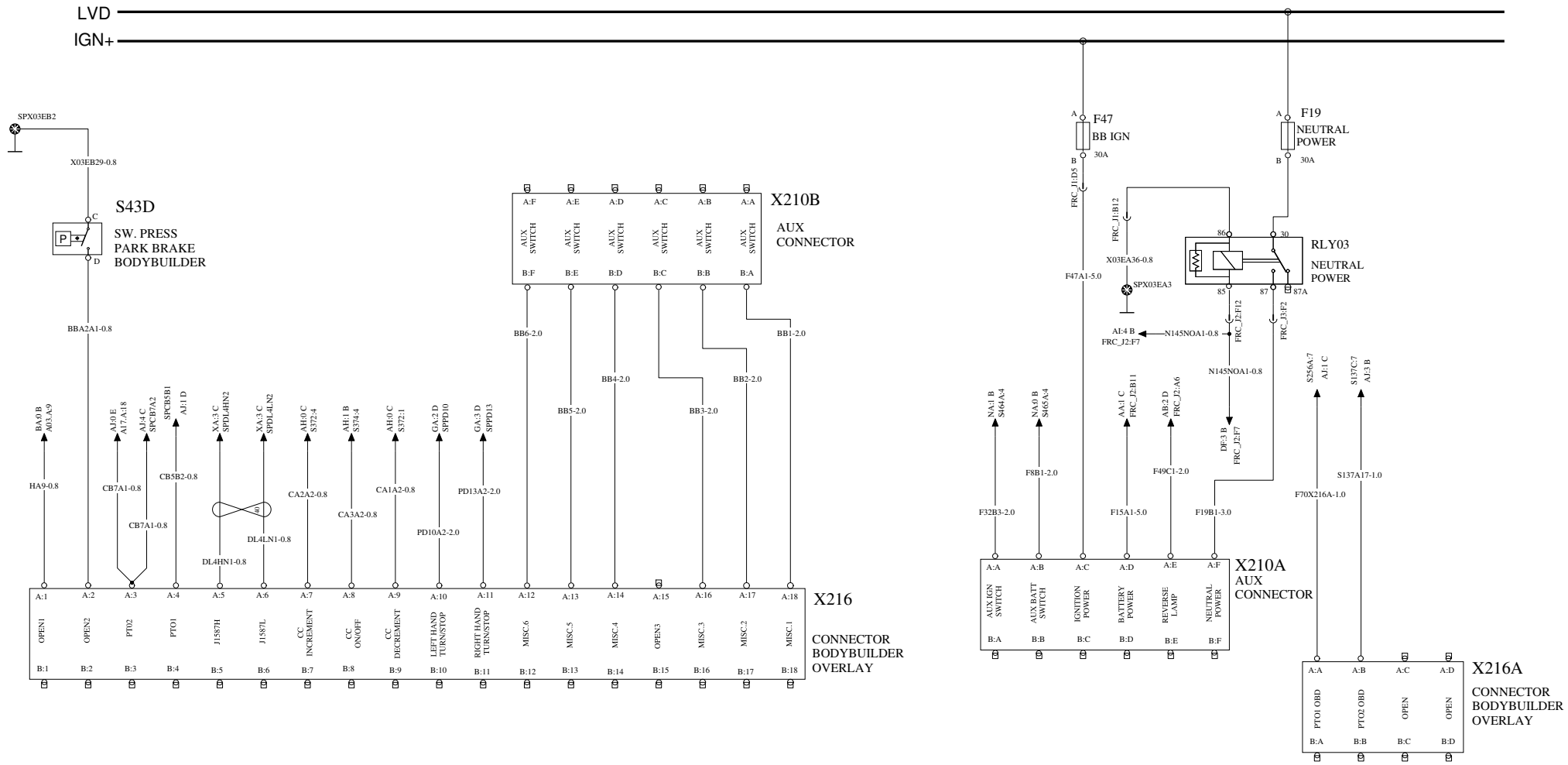

Volvo Truck Corporation	Document title WIRING DIAGRAM, 12V MACK CONVENTIONAL Document type PRODUCT SCHEMATIC	Document No 23970505	Issue 03	Volume 1 (1)	Page 20 (105)

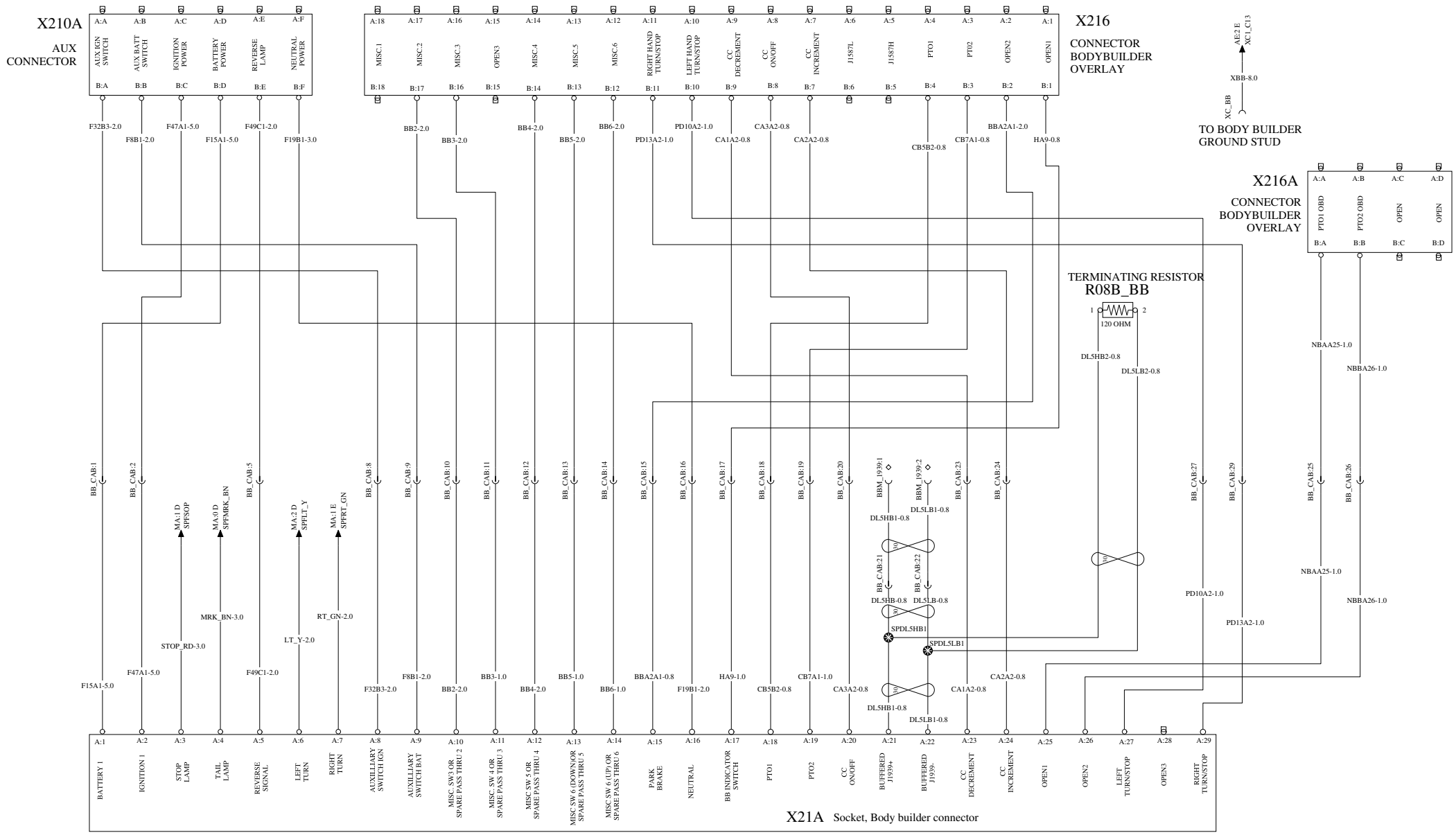

Volvo Truck Corporation	Document title: WIRING DIAGRAM, 12V MACK CONVENTIONAL Document type: PRODUCT SCHEMATIC	Document No: 23970505	Issue: 03	Volume: 1 (1)	Page: 21 (105)

BATTERY BUSSING

WIRING DIAGRAM: BL

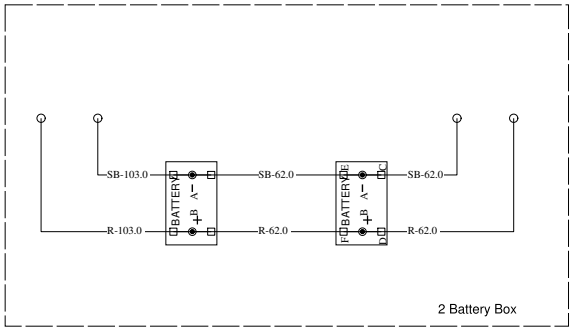

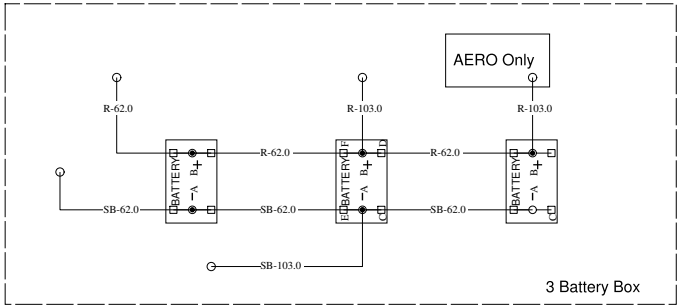

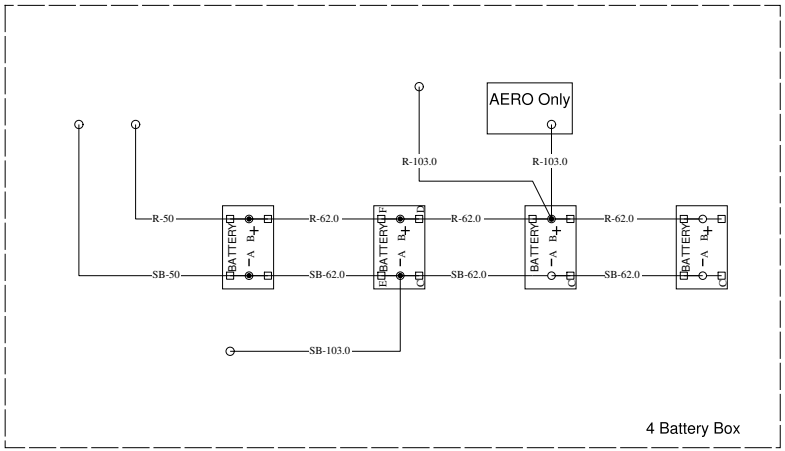

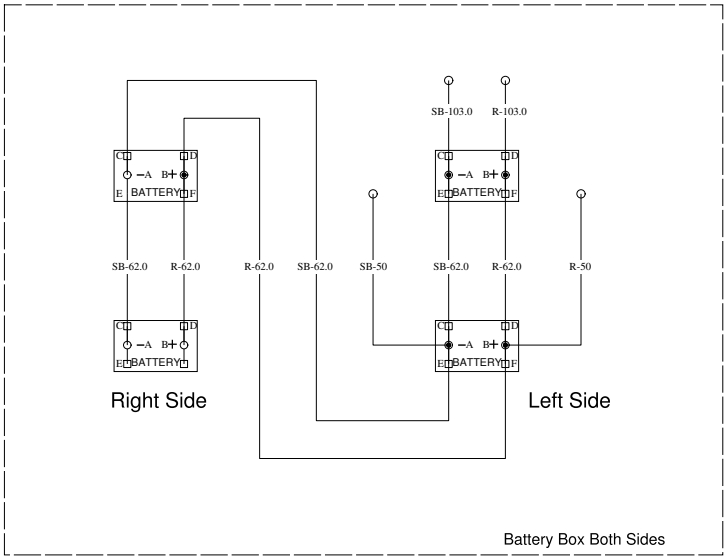

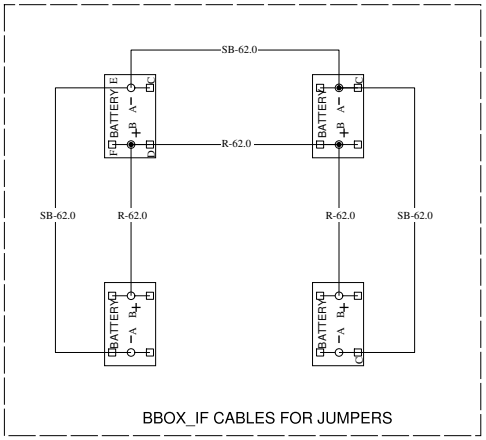

	Document title	Document No	Issue	Volume	Page
Volvo Truck Corporation	WIRING DIAGRAM, 12V MACK CONVENTIONAL Document type PRODUCT SCHEMATIC	23970505	03	1 (1)	22 (105)

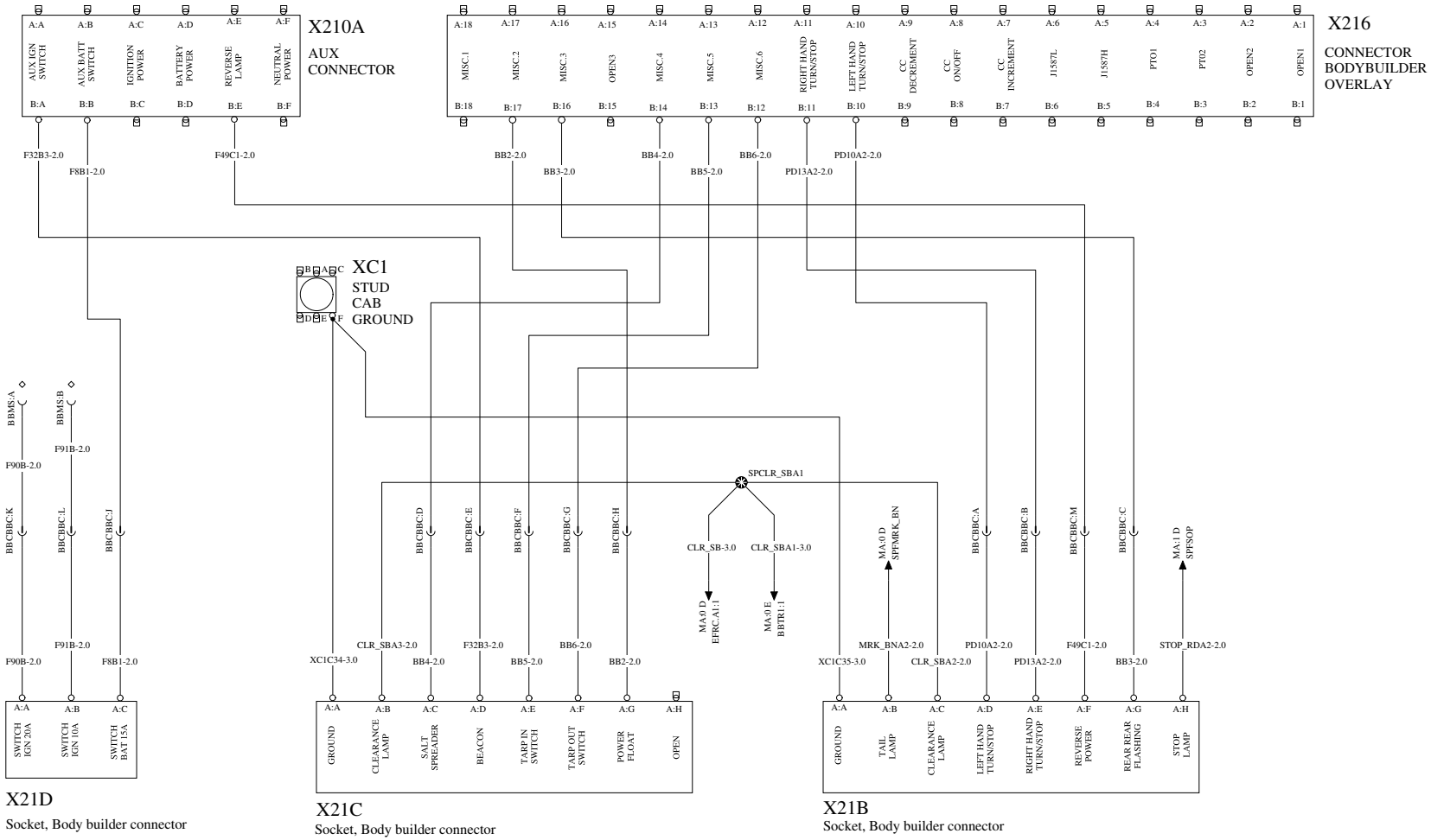

Volvo Truck Corporation	Document title: WIRING DIAGRAM, 12V MACK CONVENTIONAL Document type: PRODUCT SCHEMATIC	Document No: 23970505	Issue: 03	Volume: 1 (1)	Page: 23 (105)

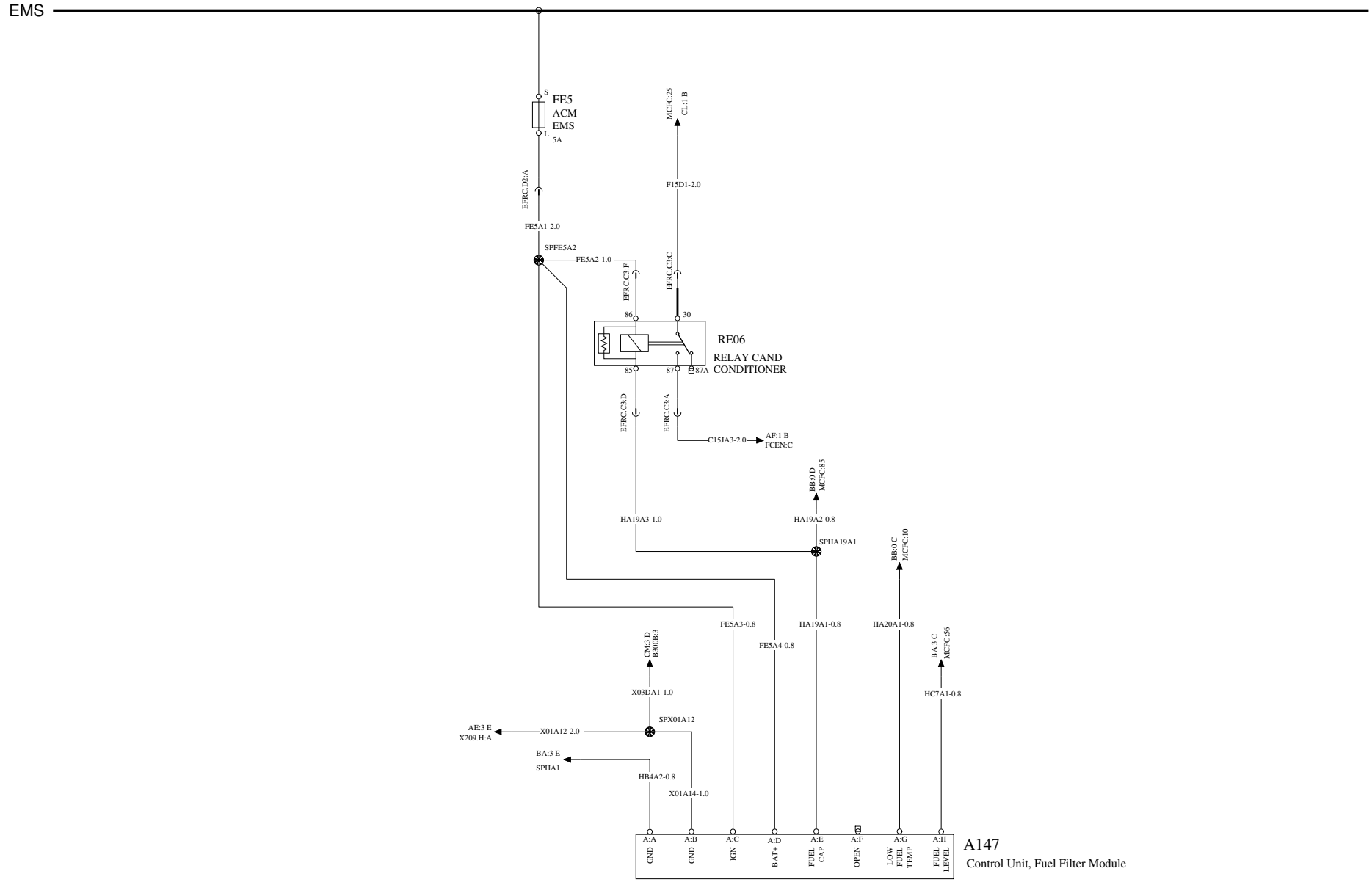

	Document title	Document No	Issue	Volume	Page
Volvo Truck Corporation	WIRING DIAGRAM, 12V MACK CONVENTIONAL Document type PRODUCT SCHEMATIC	23970505	03	1 (1)	24 (105)

TMC RP 1226 CONNECTORS

WIRING DIAGRAM : BY

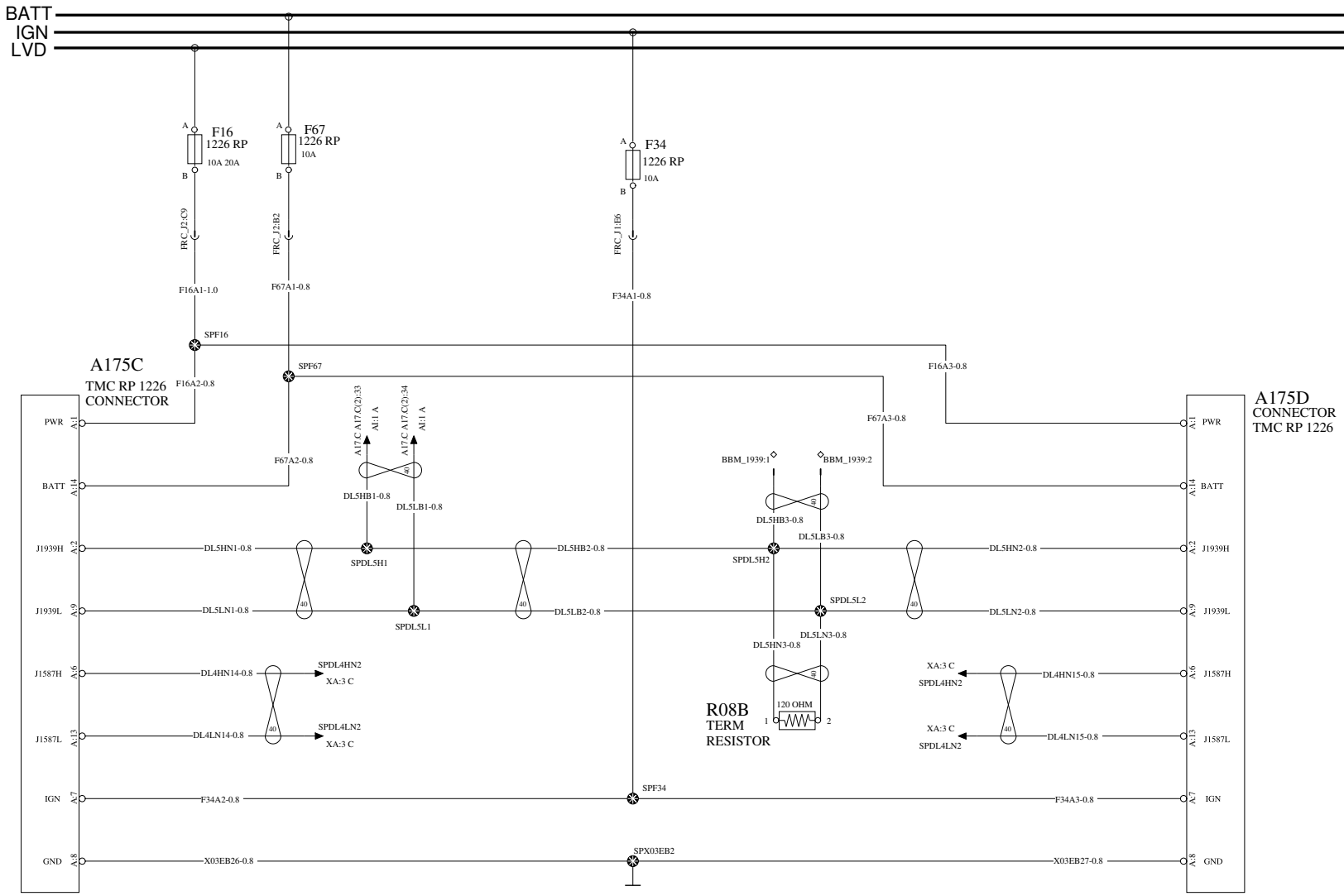

Volvo Truck Corporation	Document title WIRING DIAGRAM, 12V MACK CONVENTIONAL Document type PRODUCT SCHEMATIC	Document No 23970505	Issue 03	Volume 1 (1)	Page 25 (105)

ENGINE HEATER

WIRING DIAGRAM: CA

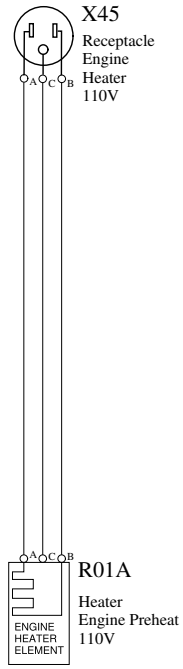

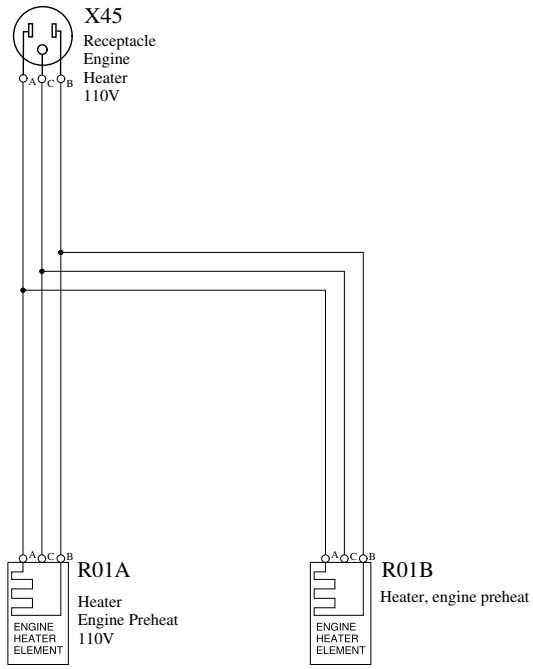

Volvo Truck Corporation	Document title WIRING DIAGRAM, 12V MACK CONVENTIONAL Document type PRODUCT SCHEMATIC	Document No 23970505	Issue 03	Volume 1 (1)	Page 26 (105)

ENGINE CONTROL MACK ENGINE

WIRING DIAGRAM: CB

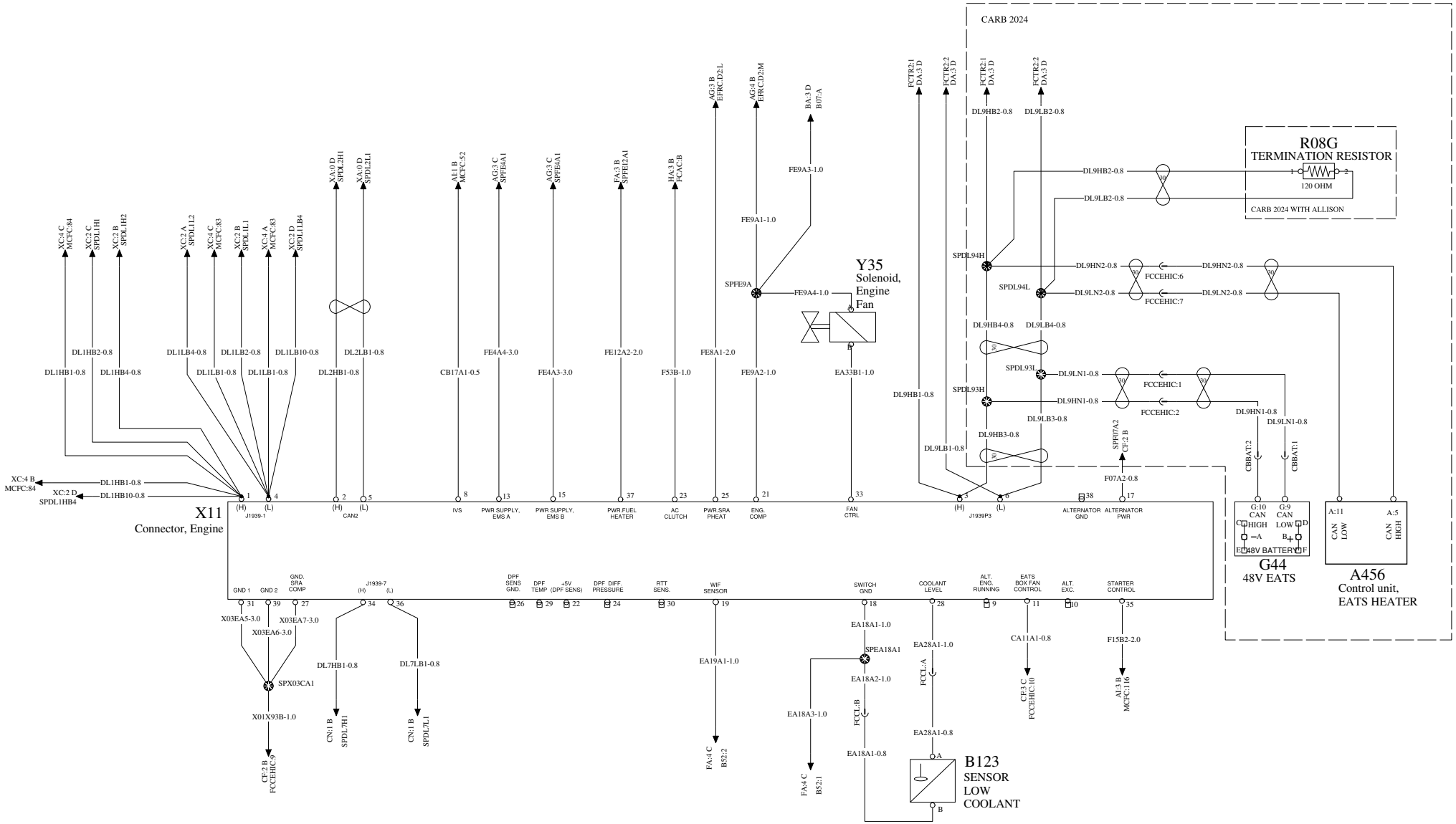

Volvo Truck Corporation	Document title: WIRING DIAGRAM, 12V MACK CONVENTIONAL Document type: PRODUCT SCHEMATIC	Document No: 23970505	Issue: 03	Volume: 1 (1)	Page: 27 (105)

WIRING DIAGRAM: CF

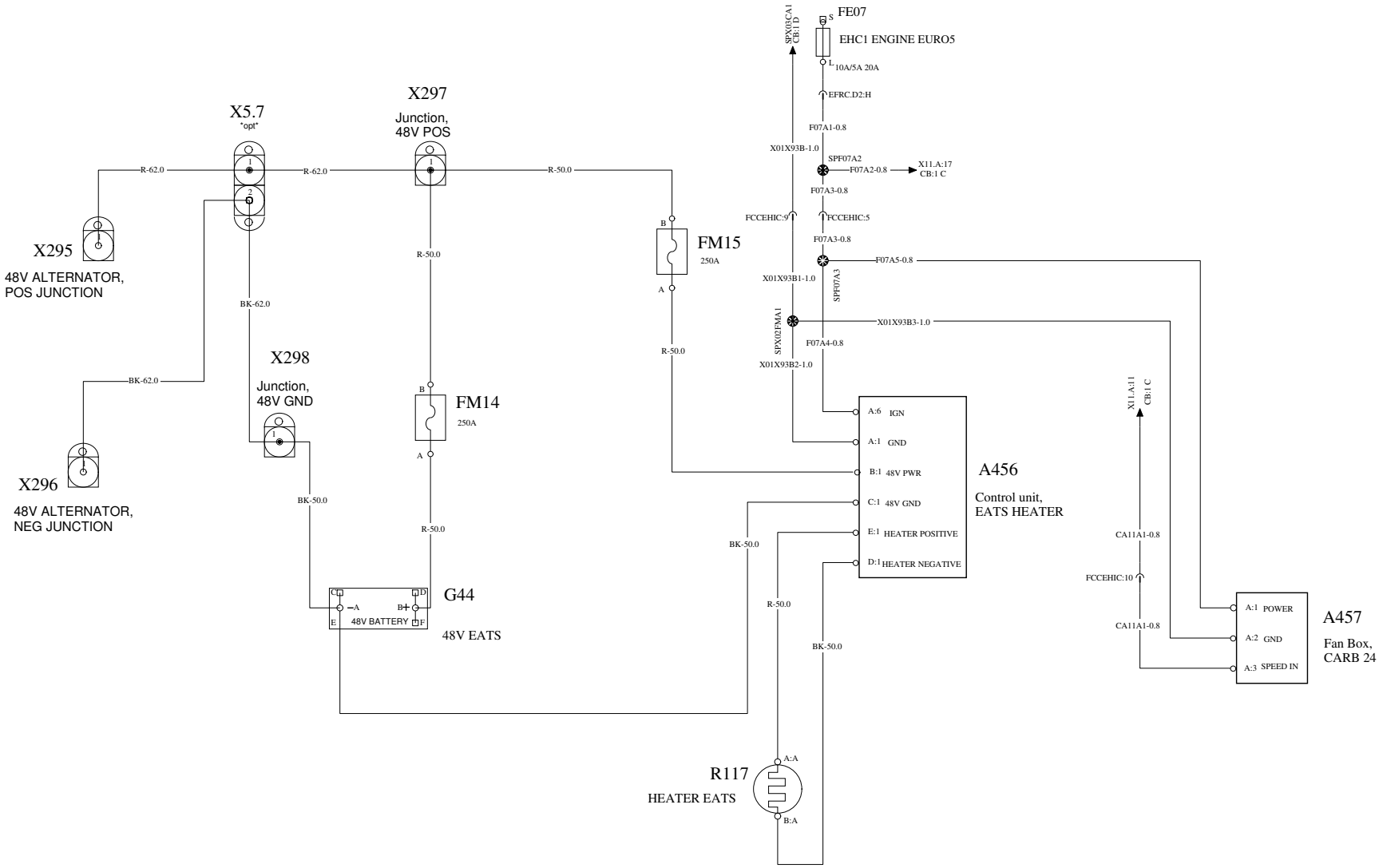

Volvo Truck Corporation	Document title WIRING DIAGRAM, 12V MACK CONVENTIONAL Document type PRODUCT SCHEMATIC	Document No 23970505	Issue 03	Volume 1 (1)	Page 28 (105)

BATT
EMS
KEY

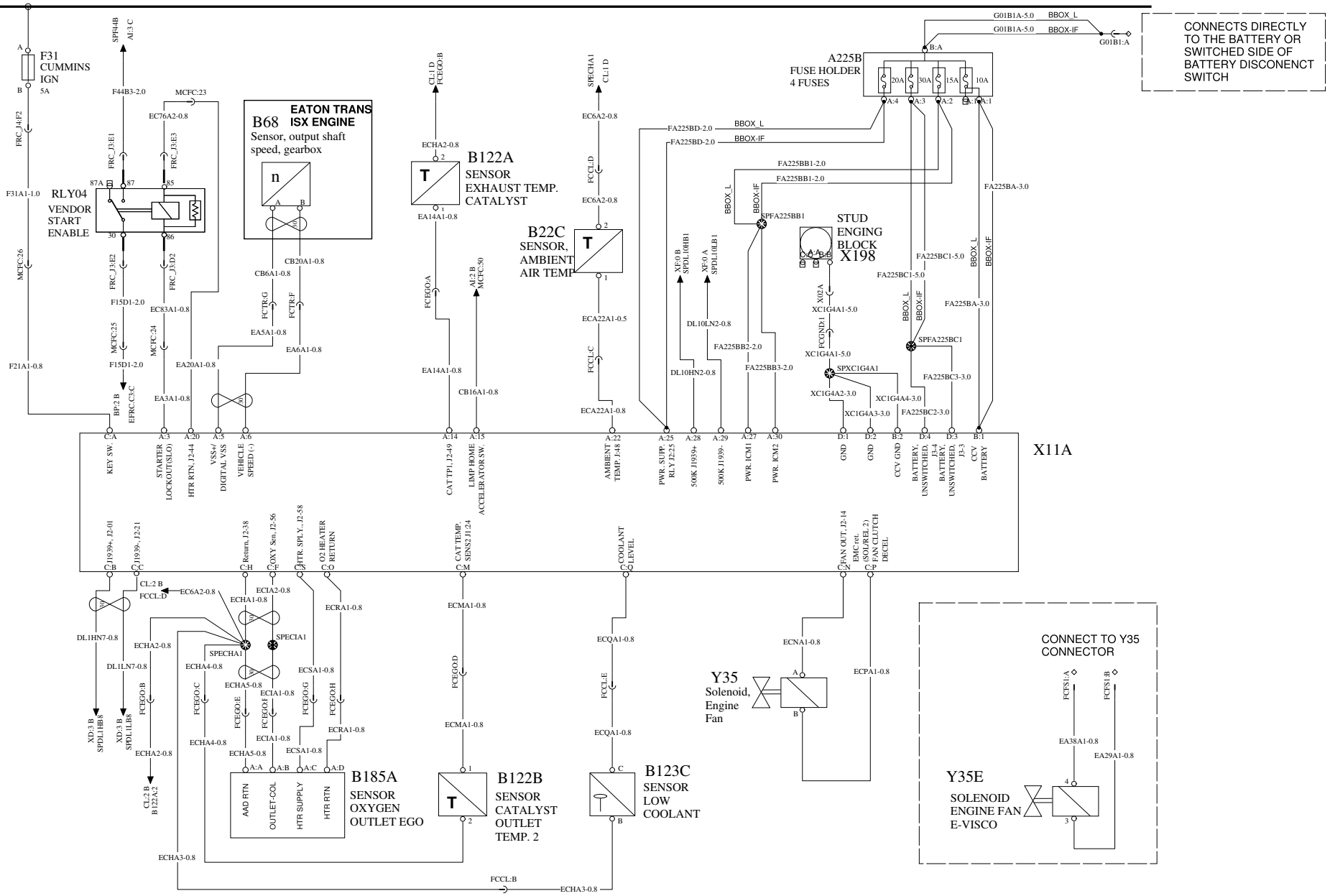

Volvo Truck Corporation	Document title WIRING DIAGRAM, 12V MACK CONVENTIONAL Document type PRODUCT SCHEMATIC	Document No 23970505	Issue 03	Volume 1 (1)	Page 29 (105)

METHANE DETECTION

WIRING DIAGRAM: CM

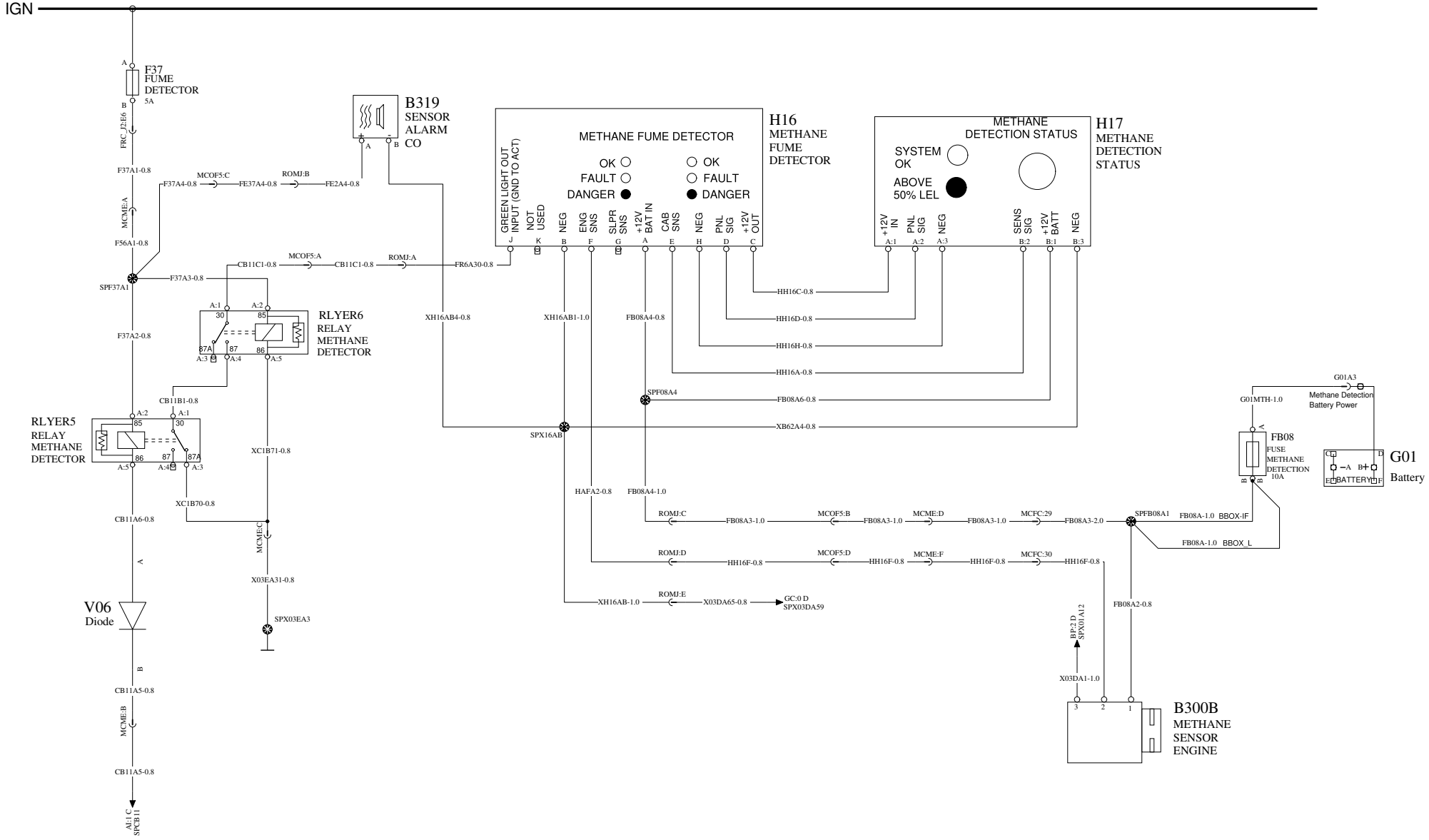

Volvo Truck Corporation	Document title WIRING DIAGRAM, 12V MACK CONVENTIONAL Document type PRODUCT SCHEMATIC	Document No 23970505	Issue 03	Volume 1 (1)	Page 30 (105)

UREA DOSING SYSTEM - MACK ENGINE OBD 2018

WIRING DIAGRAM: CN

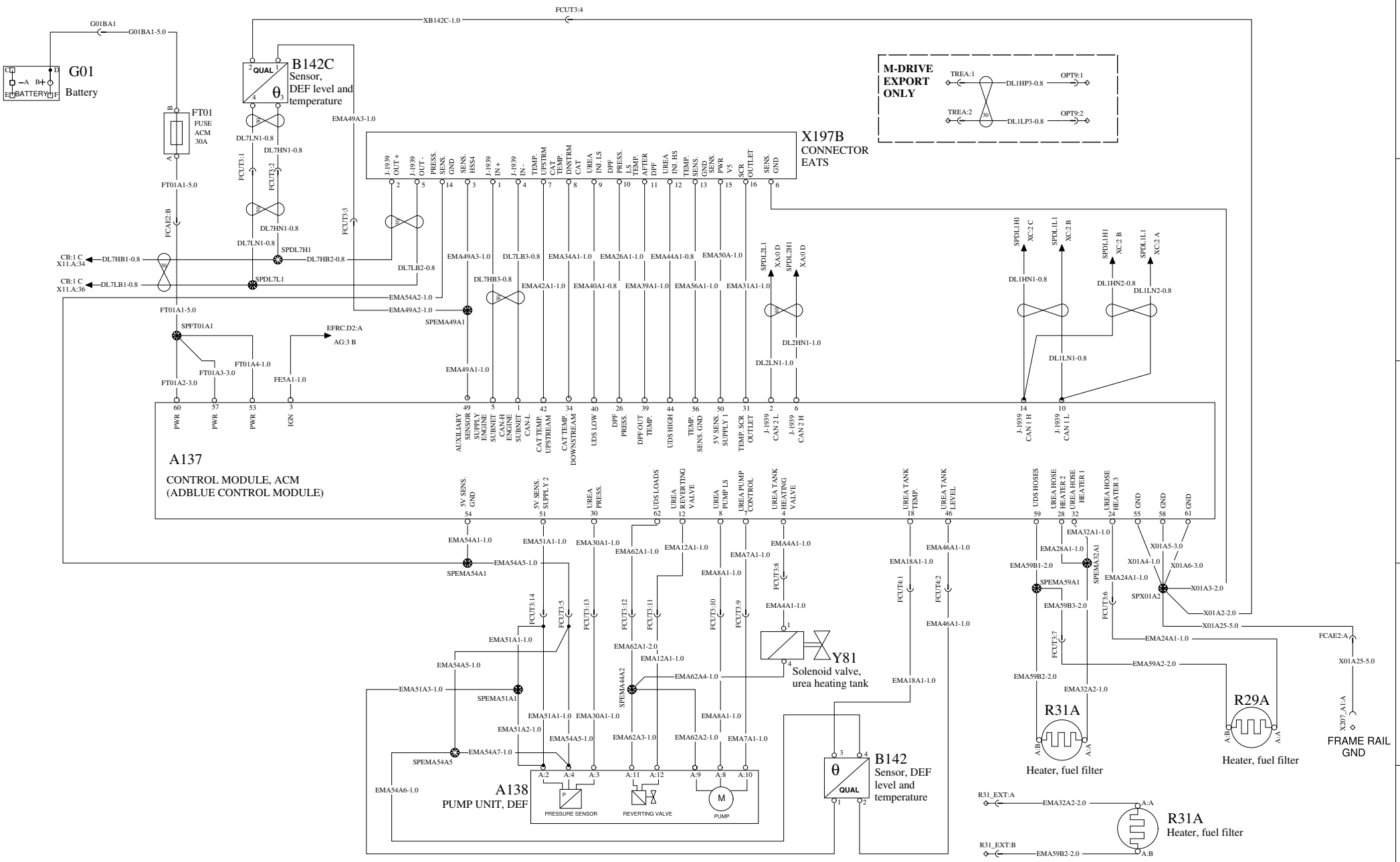

Volvo Truck Corporation	Document title WIRING DIAGRAM, 12V MACK CONVENTIONAL Document type PRODUCT SCHEMATIC	Document No 23970505	Issue 03	Volume 1 (1)	Page 31 (105)

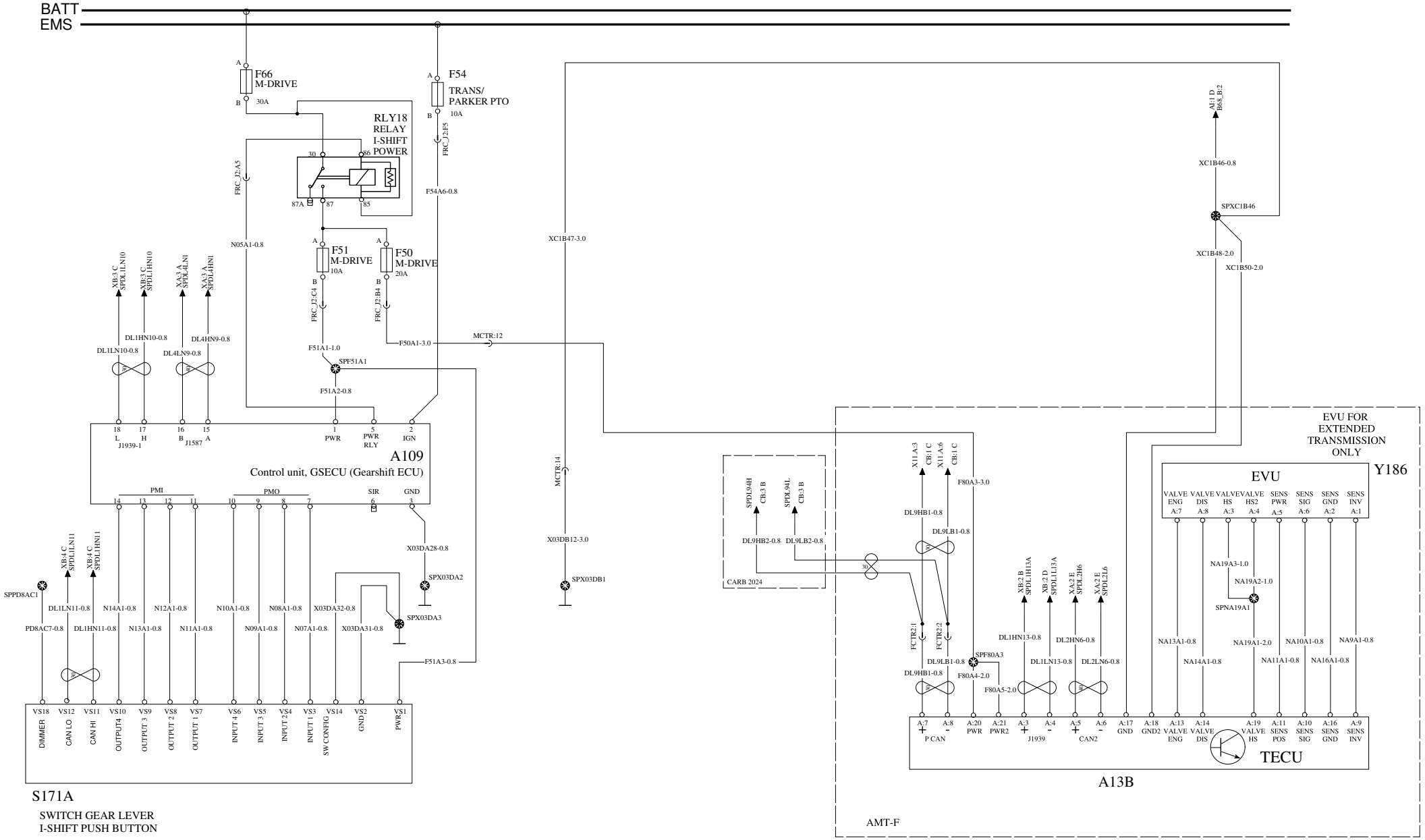

Volvo Truck Corporation	Document title WIRING DIAGRAM, 12V MACK CONVENTIONAL Document type PRODUCT SCHEMATIC	Document No 23970505	Issue 03	Volume 1 (1)	Page 32 (105)

TRANSMISSION CONTROL - ULTRASHIFT

WIRING DIAGRAM: DB

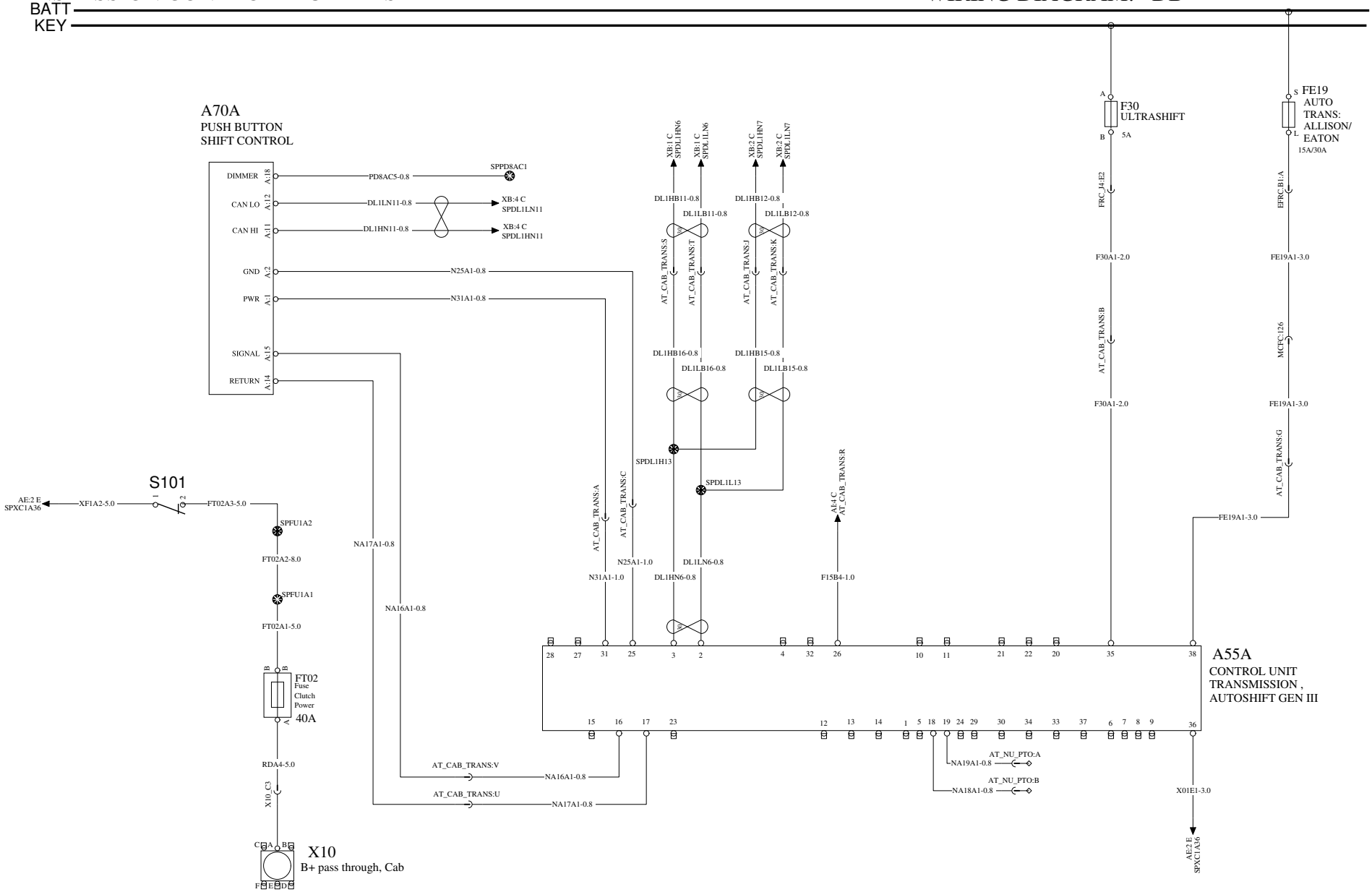

Volvo Truck Corporation	Document title WIRING DIAGRAM, 12V MACK CONVENTIONAL Document type PRODUCT SCHEMATIC	Document No 23970505	Issue 03	Volume 1 (1)	Page 33 (105)

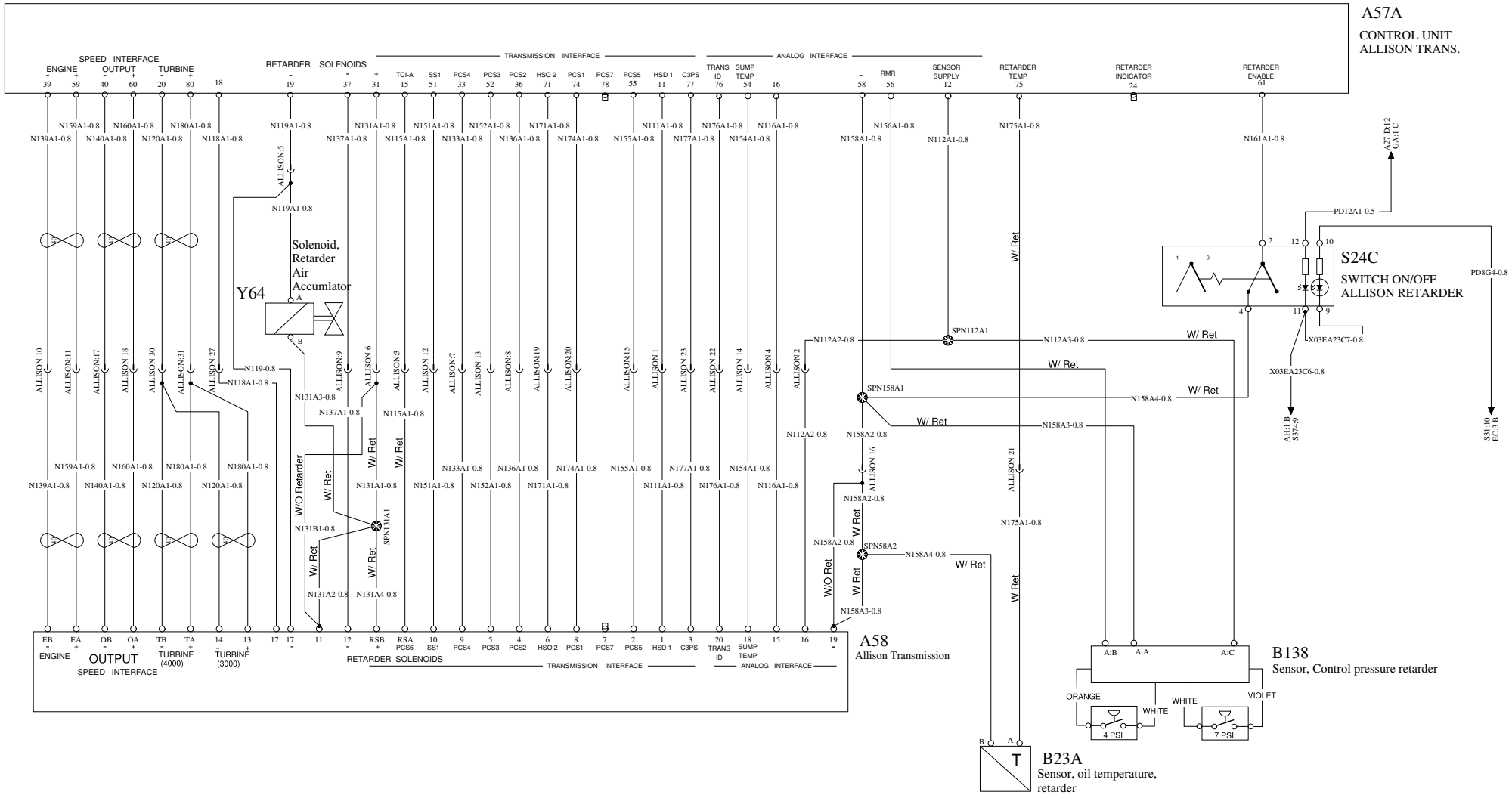

Volvo Truck Corporation	Document title WIRING DIAGRAM, 12V MACK CONVENTIONAL Document type PRODUCT SCHEMATIC	Document No 23970505	Issue 03	Volume 1 (1)	Page 34 (105)

ALLISON TRANSMISSION CONTROLS 2/2

WIRING DIAGRAM: DF

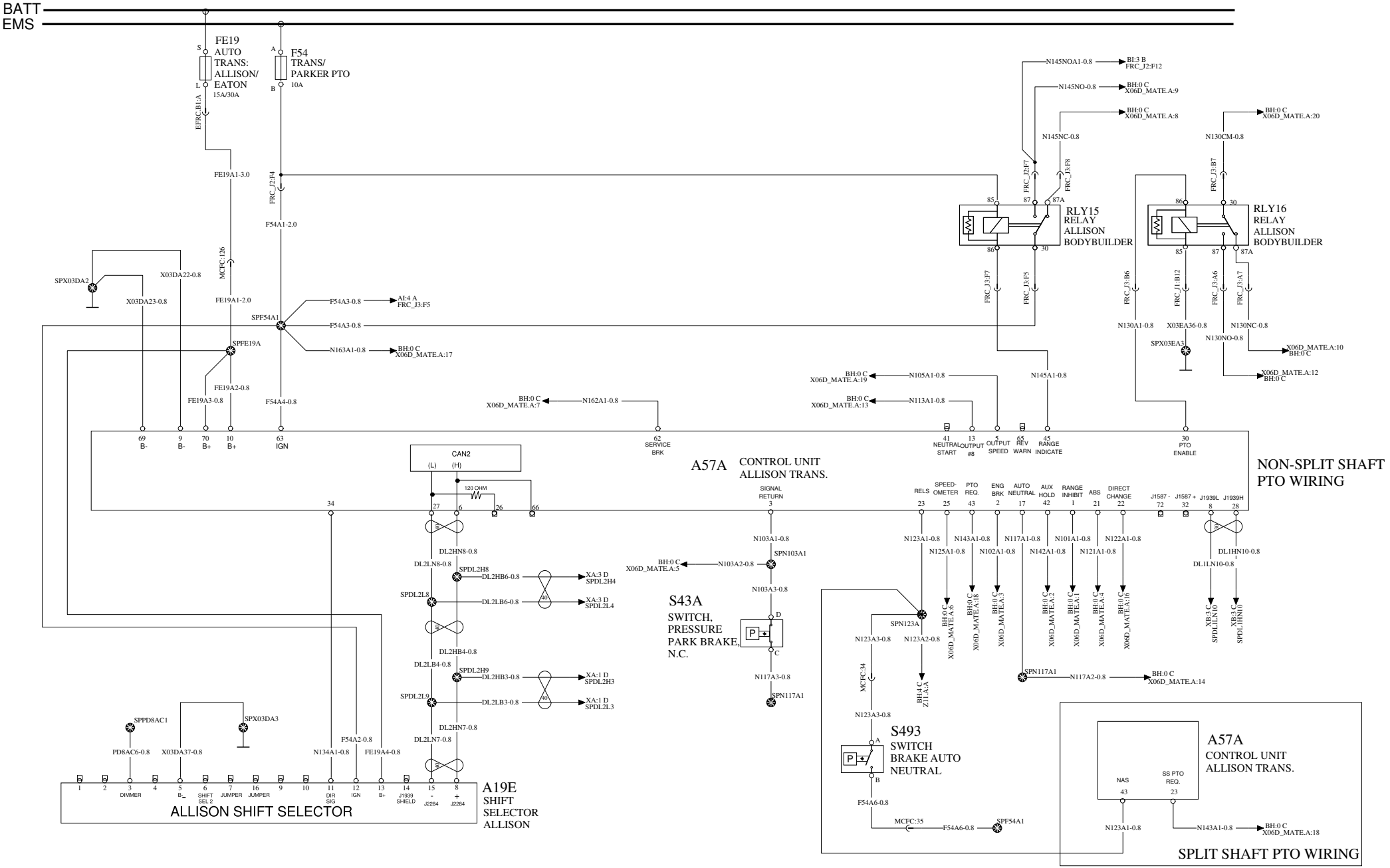

	Document title	Document No	Issue	Volume	Page
Volvo Truck Corporation	WIRING DIAGRAM, 12V MACK CONVENTIONAL Document type PRODUCT SCHEMATIC	23970505	03	1 (1)	35 (105)

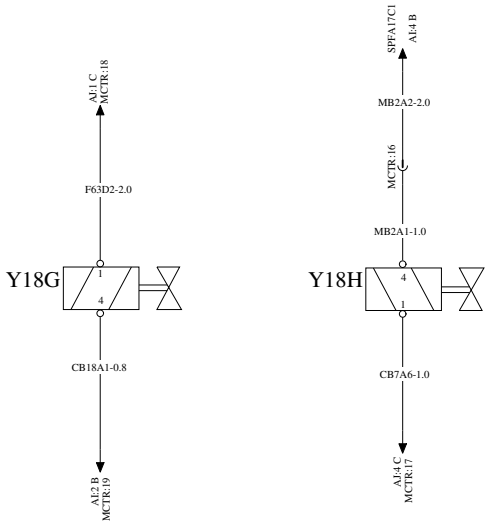
AJ1 C
MCTR:18
F63D2-2.0
Y18G
1
4
CB18A1-0.8
AI2 B
MCTR:19
SPFA17C1
AI4 B
MB2A2-2.0
MCTR:16
MB2A1-1.0
Y18H
4
1
CB7A6-1.0
AJ4 C
MCTR:17

ABS CONTROL WABCO

WIRING DIAGRAM: EA

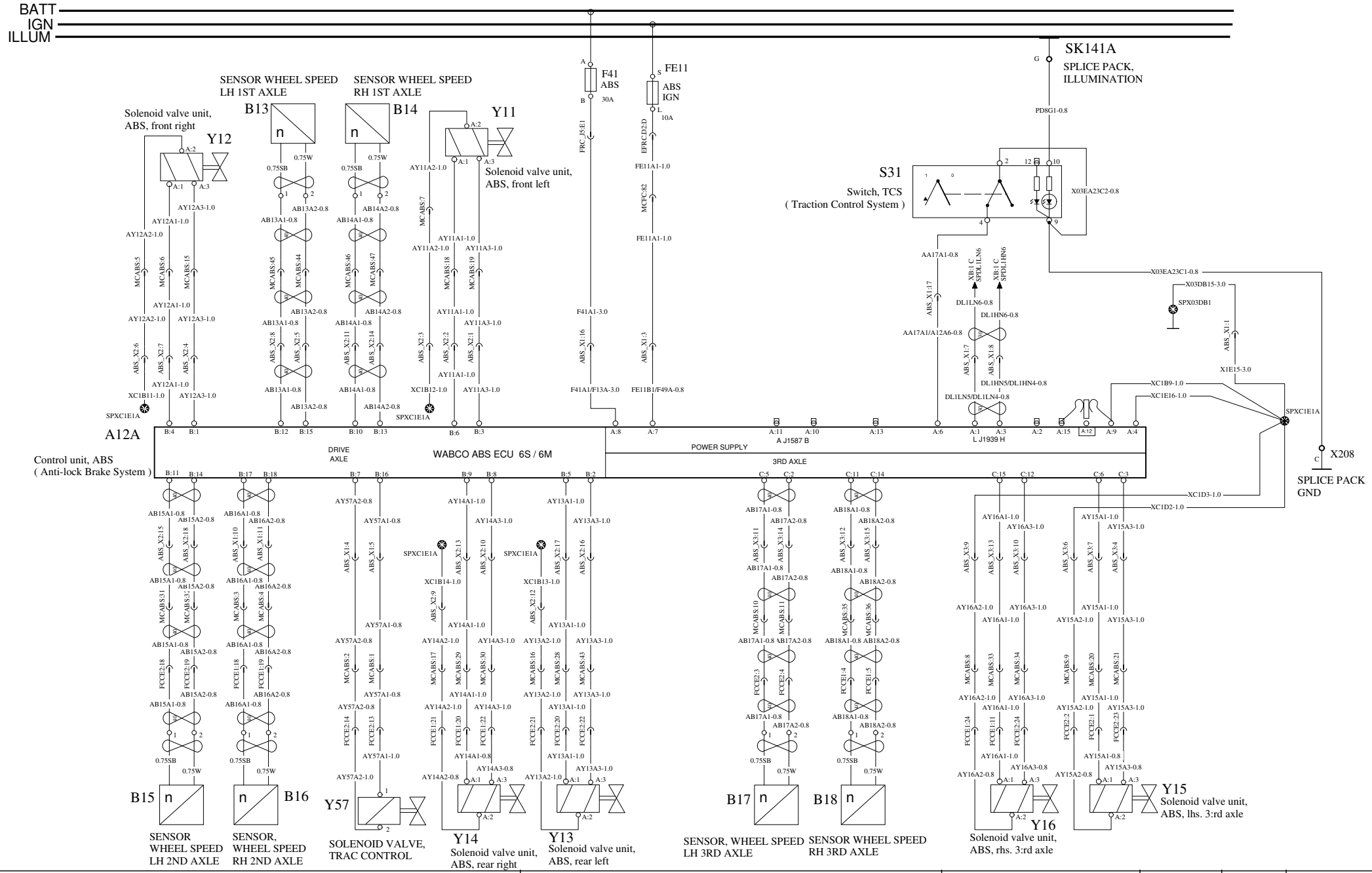

Volvo Truck Corporation	Document title: WIRING DIAGRAM, 12V MACK CONVENTIONAL Document type: PRODUCT SCHEMATIC	Document No: 23970505	Issue: 03	Volume: 1 (1)	Page: 37 (105)

SUSPENSION ECU 6X2

WIRING DIAGRAM: EB

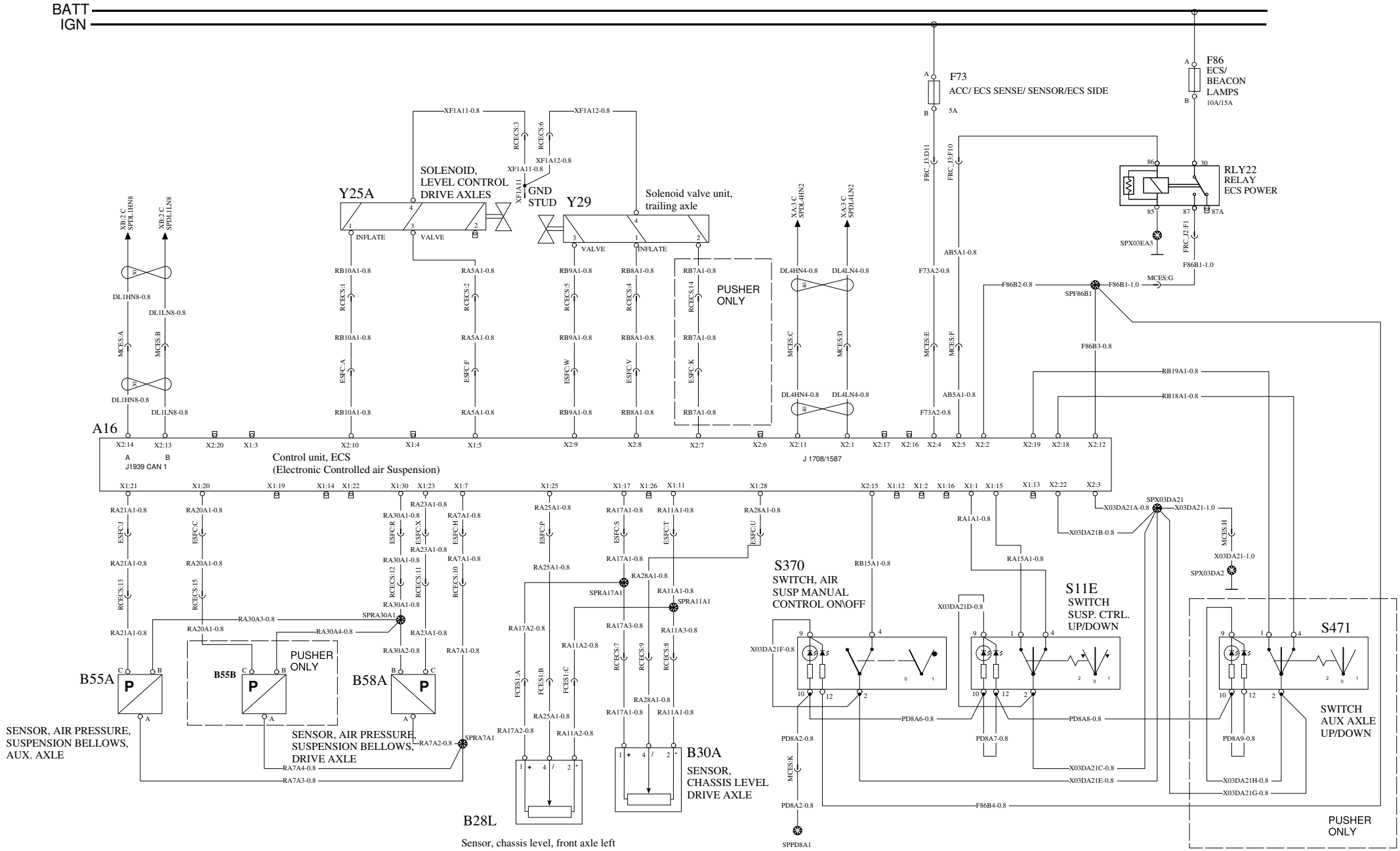

Volvo Truck Corporation	Document title: WIRING DIAGRAM, 12V MACK CONVENTIONAL Document type: PRODUCT SCHEMATIC	Document No: 23970505	Issue: 03	Volume: 1 (1)	Page: 38 (105)

ABS CONTROL BENDIX

WIRING DIAGRAM: EC

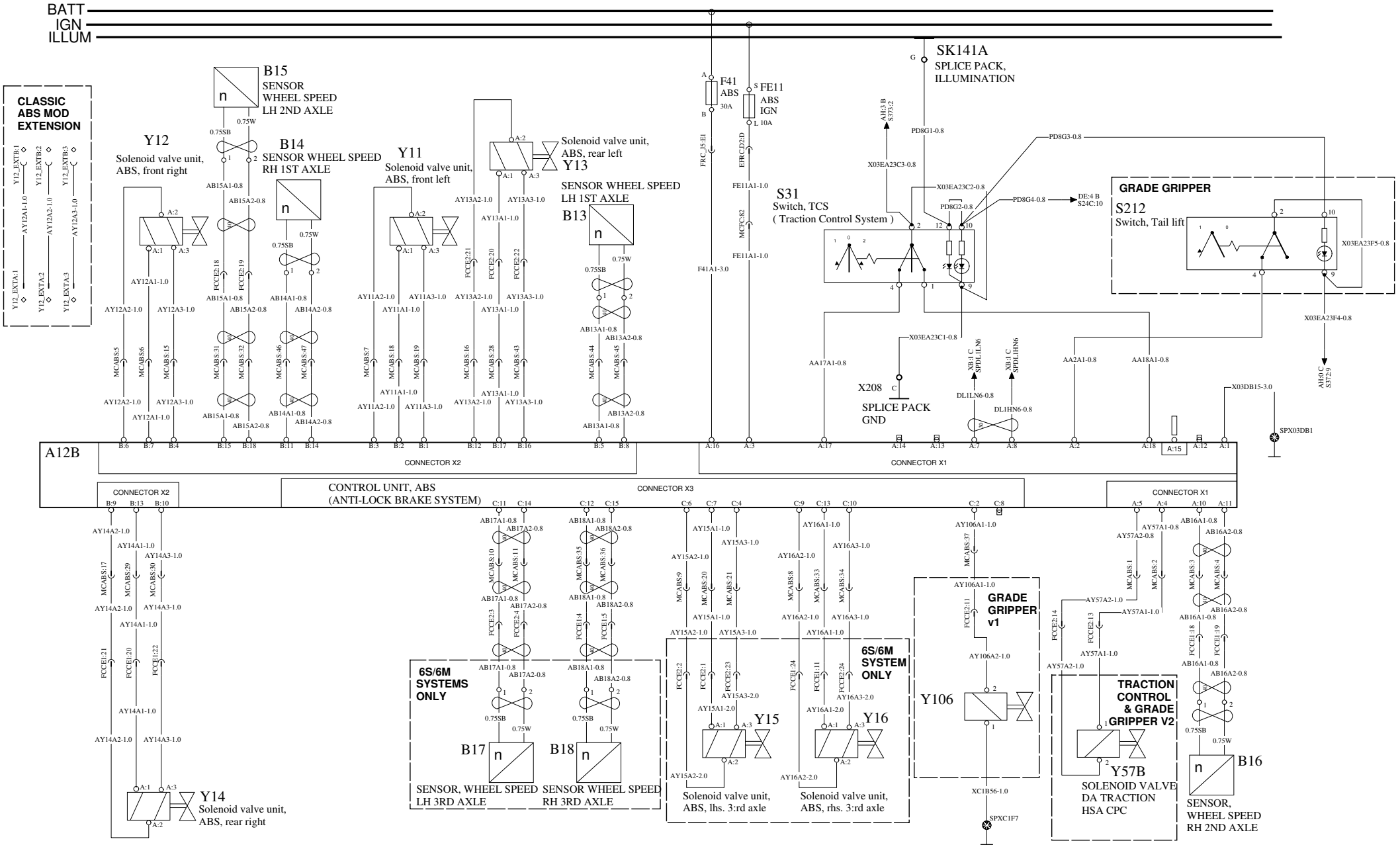

Volvo Truck Corporation	Document title WIRING DIAGRAM, 12V MACK CONVENTIONAL Document type PRODUCT SCHEMATIC	Document No 23970505	Issue 03	Volume 1 (1)	Page 39 (105)

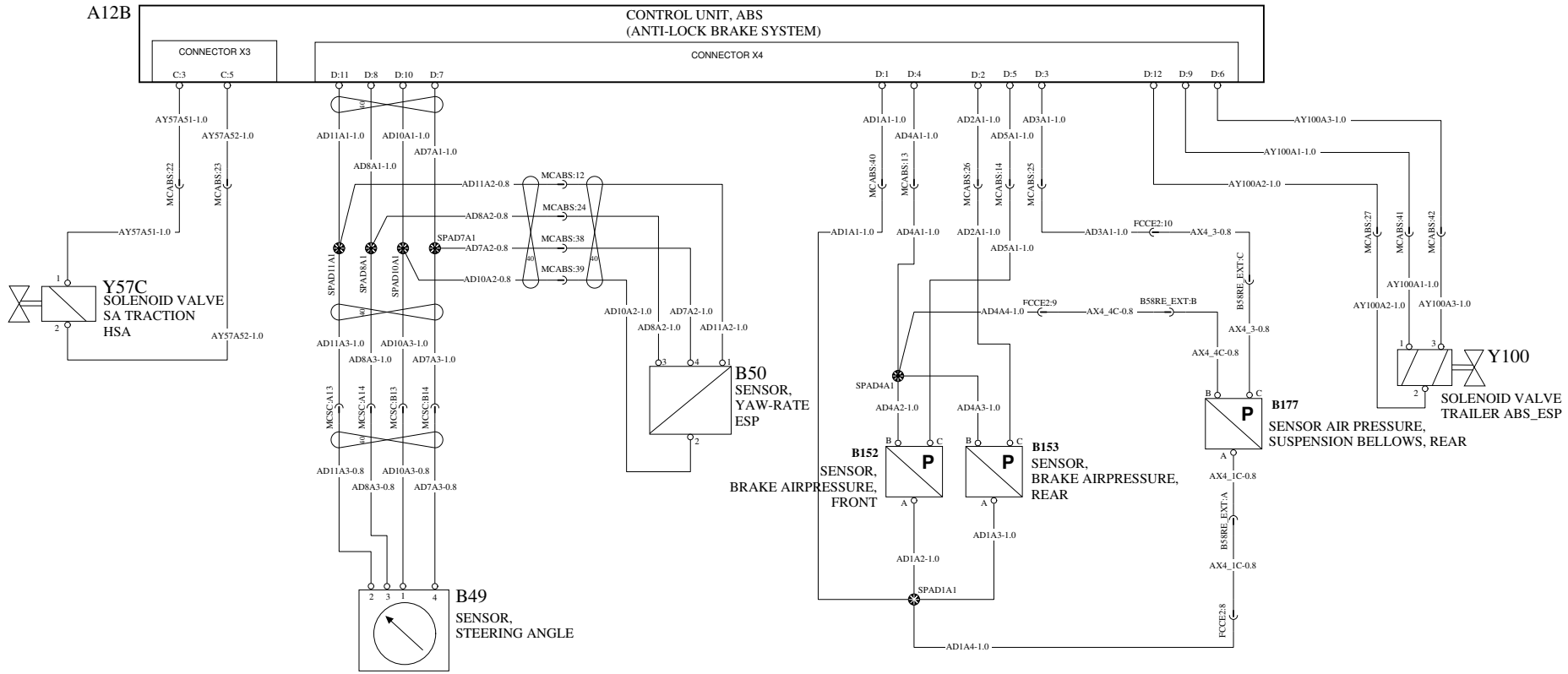

Volvo Truck Corporation	Document title WIRING DIAGRAM, 12V MACK CONVENTIONAL Document type PRODUCT SCHEMATIC	Document No 23970505	Issue 03	Volume 1 (1)	Page 40 (105)

AIR DRYER/HEATED DRAIN VALVE

WIRING DIAGRAM: FA

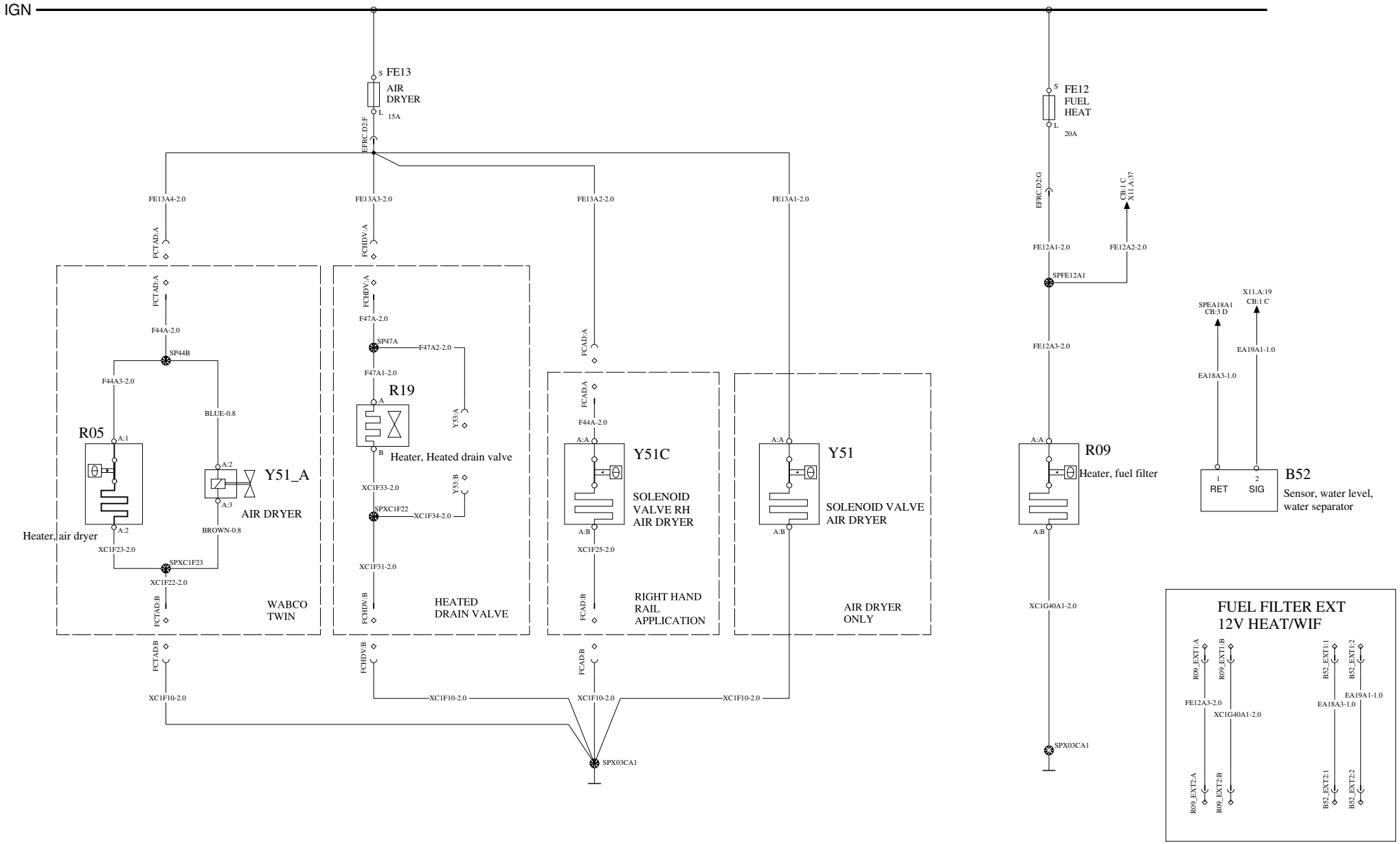

Volvo Truck Corporation	Document title WIRING DIAGRAM, 12V MACK CONVENTIONAL Document type PRODUCT SCHEMATIC	Document No 23970505	Issue 03	Volume 1 (1)	Page 41 (105)

CHASSIS SOLENOIDS 1/2

WIRING DIAGRAM: FD

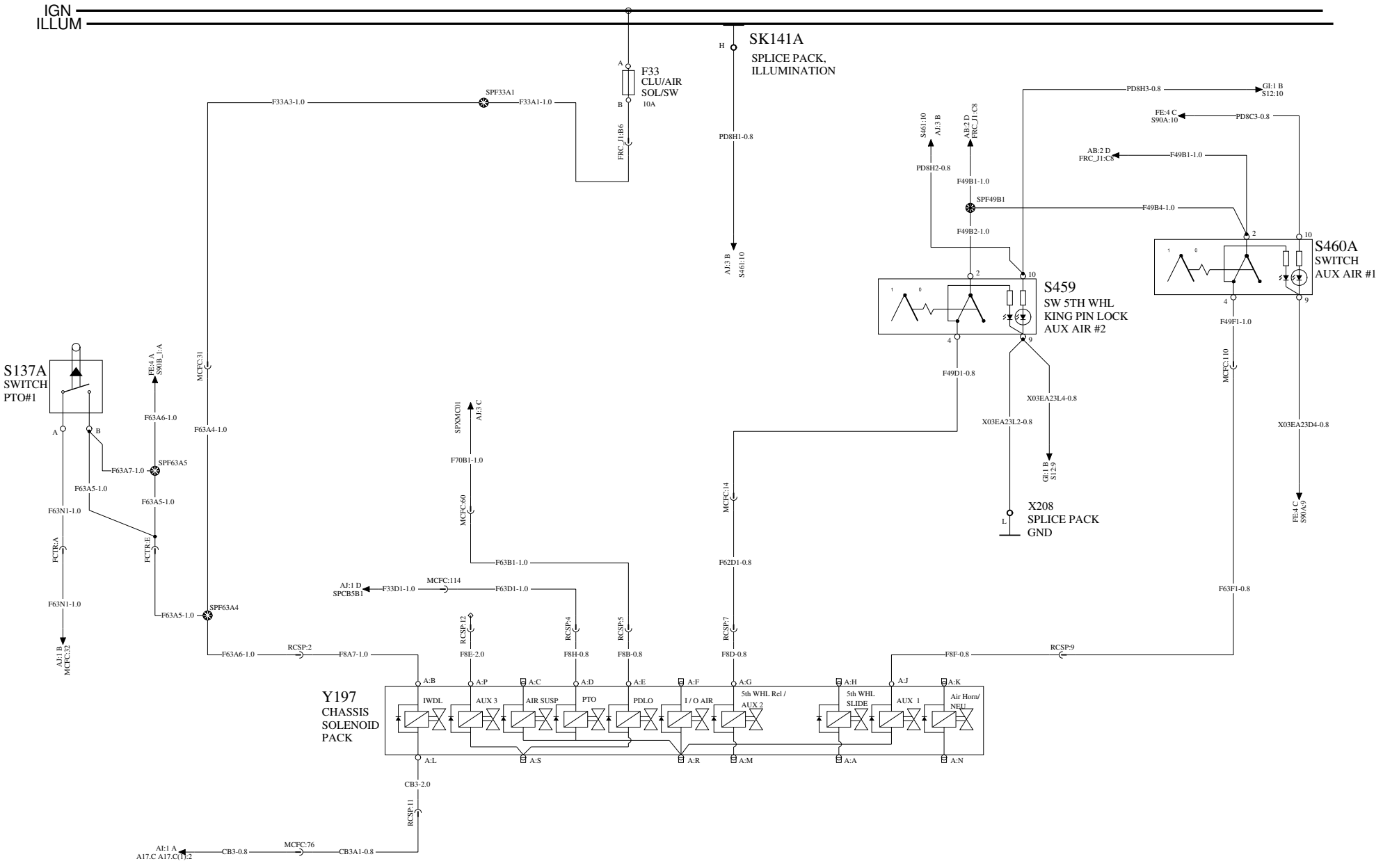

	Document title	Document No	Issue	Volume	Page
Volvo Truck Corporation	WIRING DIAGRAM, 12V MACK CONVENTIONAL Document type PRODUCT SCHEMATIC	23970505	03	1 (1)	42 (105)

CHASSIS SOLENOIDS 2/2

WIRING DIAGRAM: FE

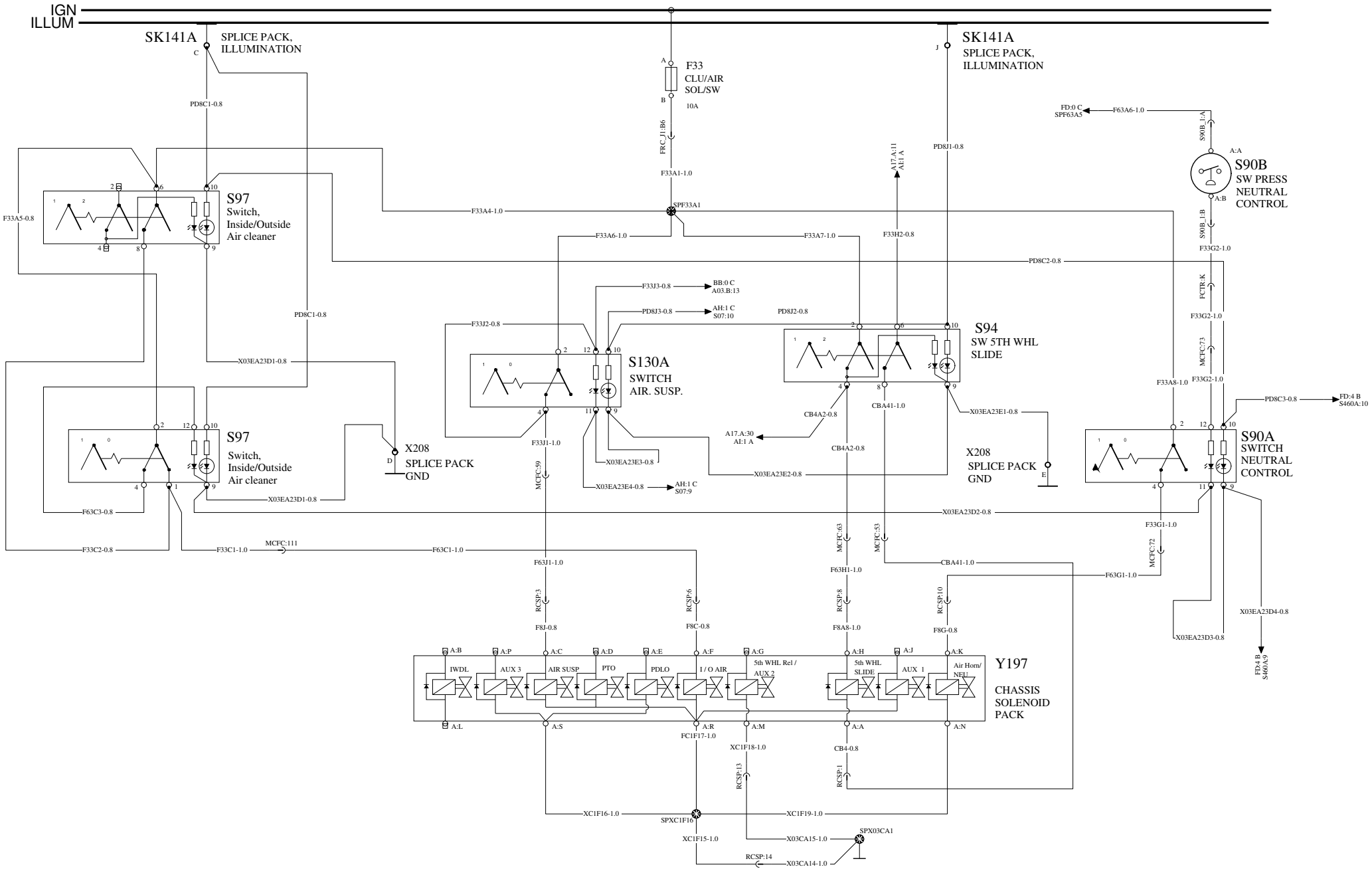

Volvo Truck Corporation	Document title: WIRING DIAGRAM, 12V MACK CONVENTIONAL Document type: PRODUCT SCHEMATIC	Document No: 23970505	Issue: 03	Volume: 1 (1)	Page: 43 (105)

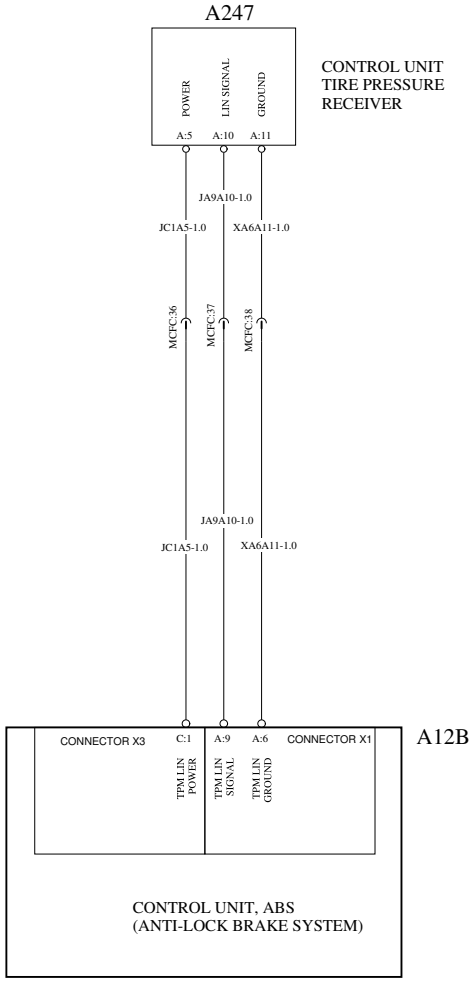
A247
POWER
LIN SIGNAL
GROUND
CONTROL UNIT
TIRE PRESSURE
RECEIVER
A:5
A:10
A:11
JA9A10-1.0
JC1A5-1.0
XA6A11-1.0
MCFC:36
MCFC:37
MCFC:38
JA9A10-1.0
JC1A5-1.0
XA6A11-1.0
CONNECTOR X3
C:1
A:9
A:6
CONNECTOR X1
A12B
TPM LIN POWER
TPM LIN SIGNAL
TPM LIN GROUND
CONTROL UNIT, ABS
(ANTI-LOCK BRAKE SYSTEM)

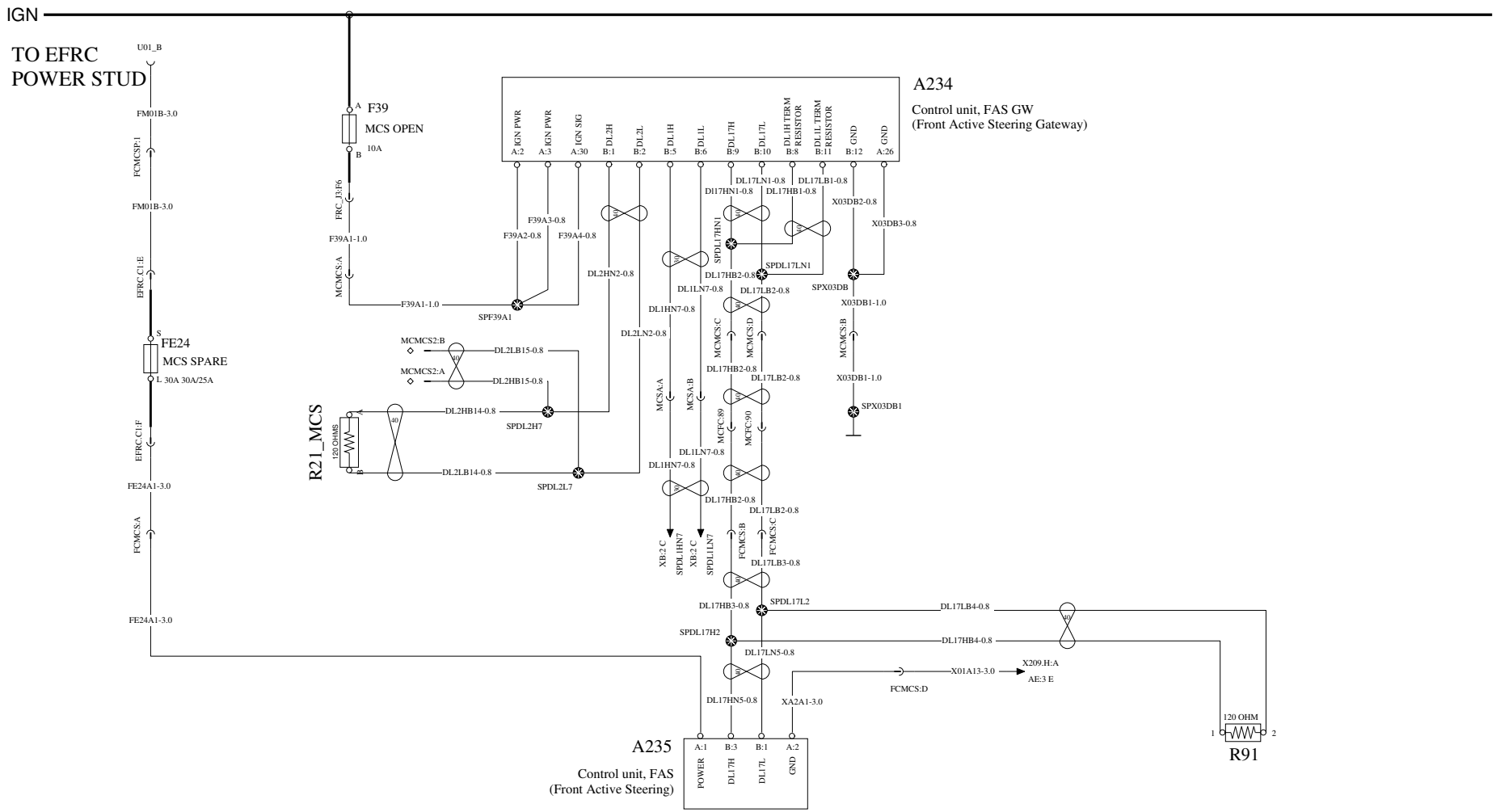

Volvo Truck Corporation	Document title WIRING DIAGRAM, 12V MACK CONVENTIONAL Document type PRODUCT SCHEMATIC	Document No 23970505	Issue 03	Volume 1 (1)	Page 45 (105)

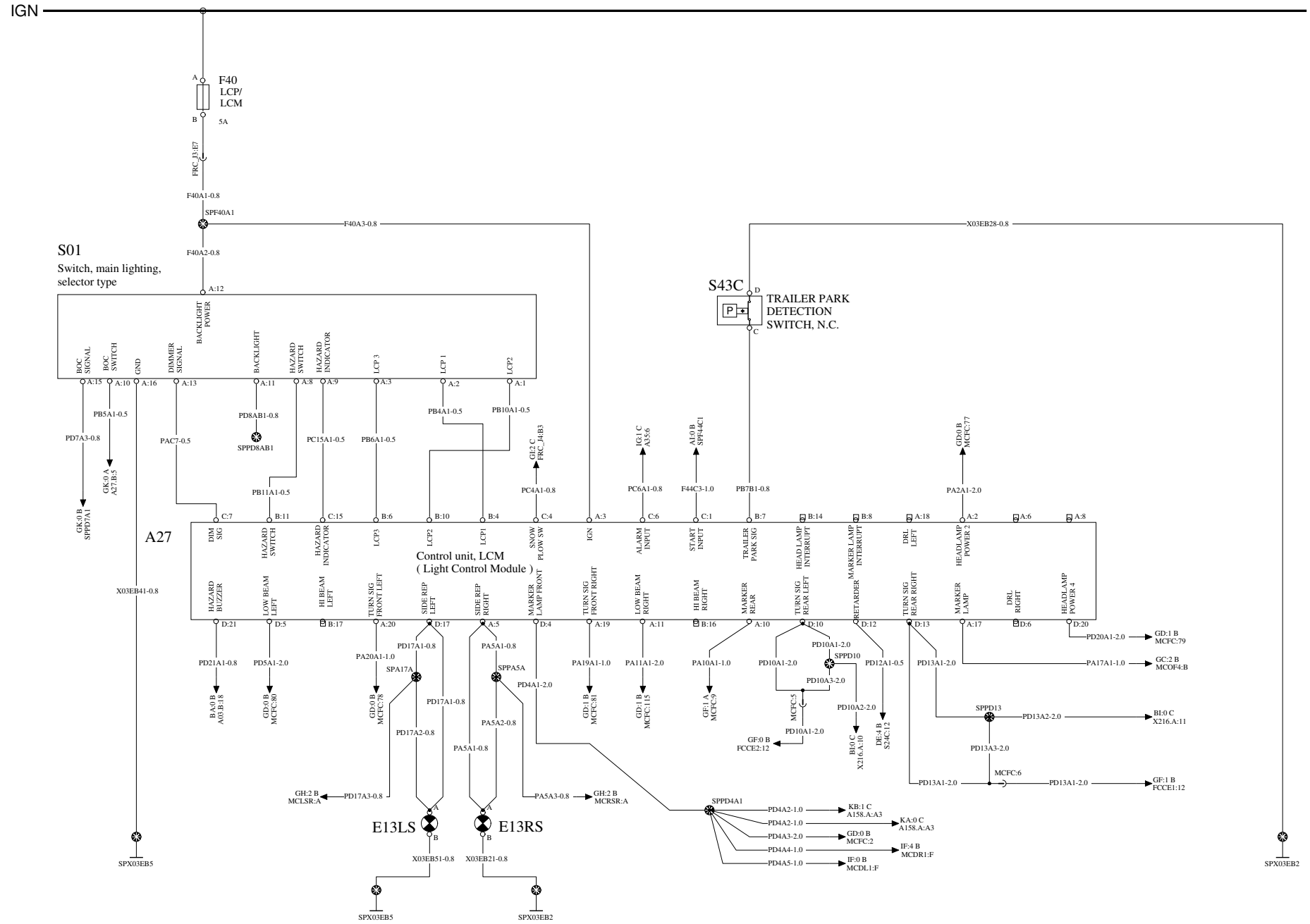

Volvo Truck Corporation	Document title WIRING DIAGRAM, 12V MACK CONVENTIONAL Document type PRODUCT SCHEMATIC	Document No 23970505	Issue 03	Volume 1 (1)	Page 46 (105)

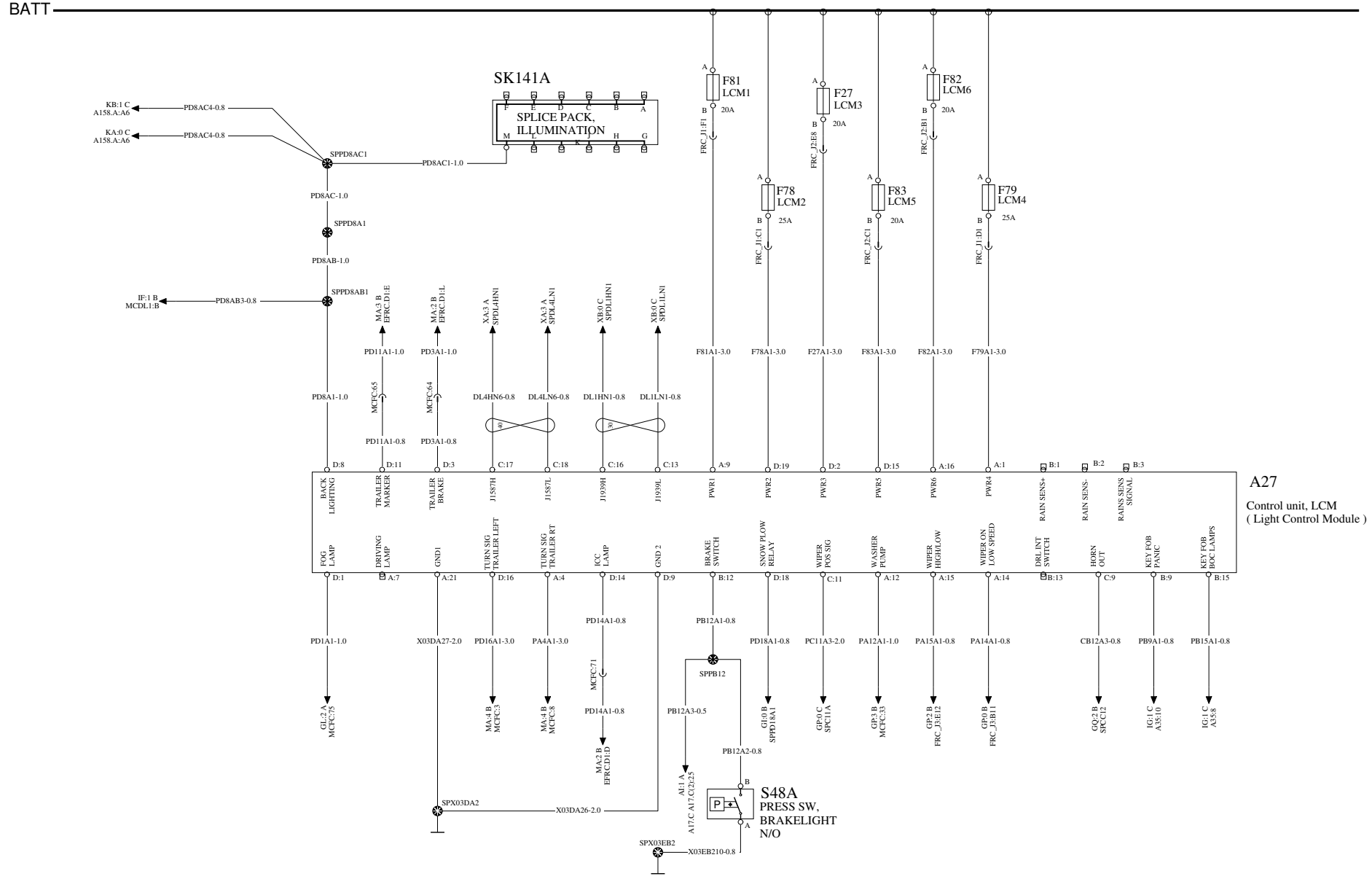

Volvo Truck Corporation	Document title WIRING DIAGRAM, 12V MACK CONVENTIONAL Document type PRODUCT SCHEMATIC	Document No 23970505	Issue 03	Volume 1 (1)	Page 47 (105)

CLEARANCE LAMPS

WIRING DIAGRAM: GC

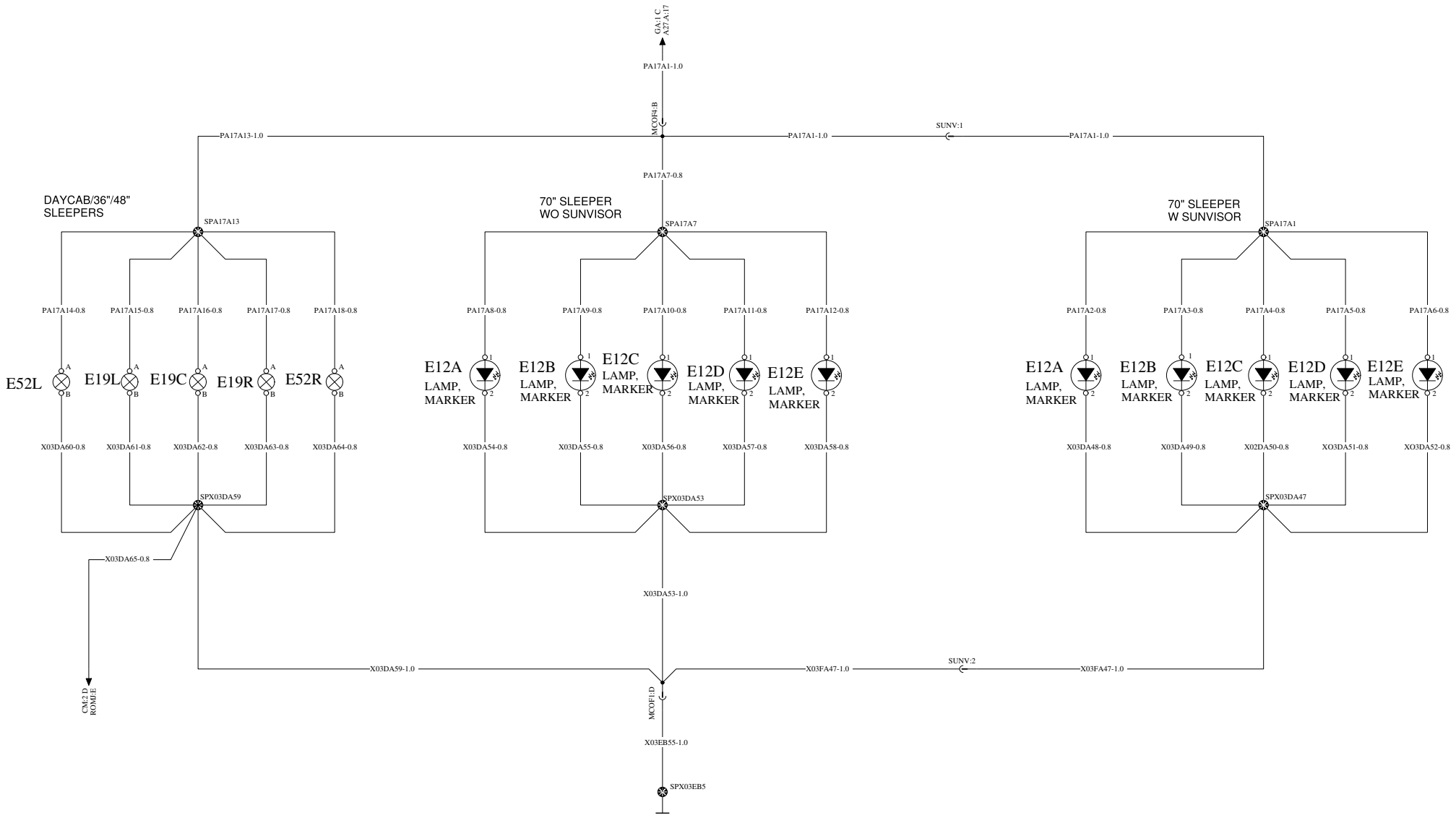

Volvo Truck Corporation	Document title WIRING DIAGRAM, 12V MACK CONVENTIONAL Document type PRODUCT SCHEMATIC	Document No 23970505	Issue 03	Volume 1 (1)	Page 48 (105)

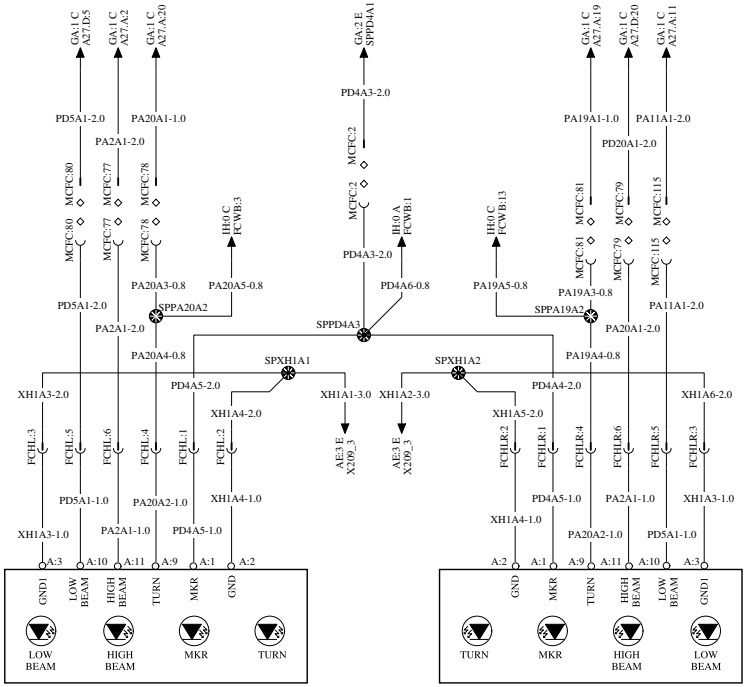

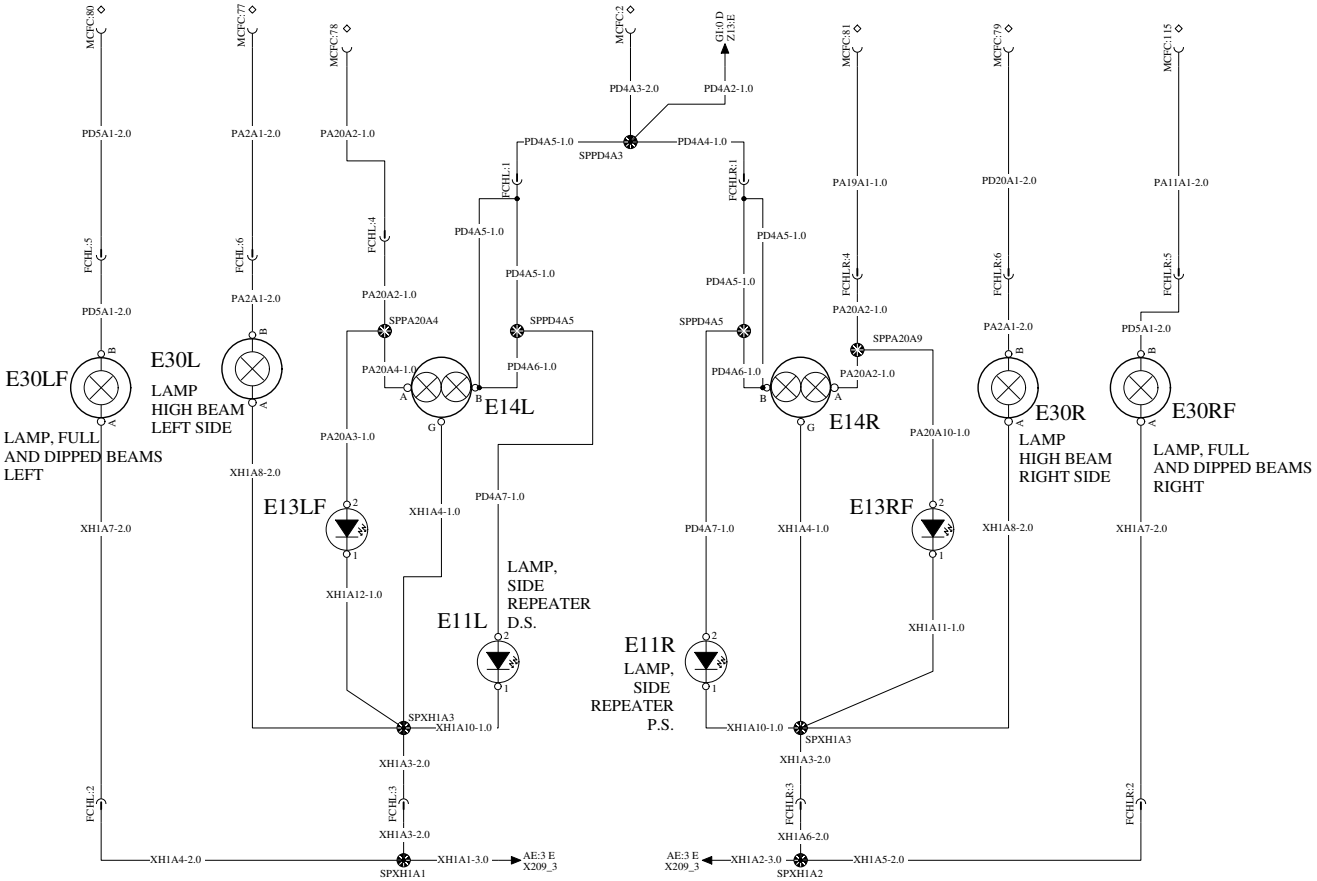

Volvo Truck Corporation	Document title WIRING DIAGRAM, 12V MACK CONVENTIONAL Document type PRODUCT SCHEMATIC	Document No 23970505	Issue 03	Volume 1 (1)	Page 49 (105)

LIGHTING FORWARD SIGNAL: CLASSIC

WIRING DIAGRAM: GE

SEE SHEET GD FOR
CONNECTIONS TO
FRONT CHASSIS

LED

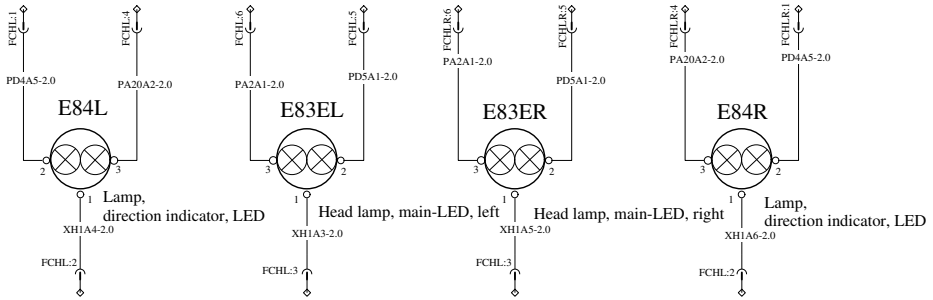

HALOGEN

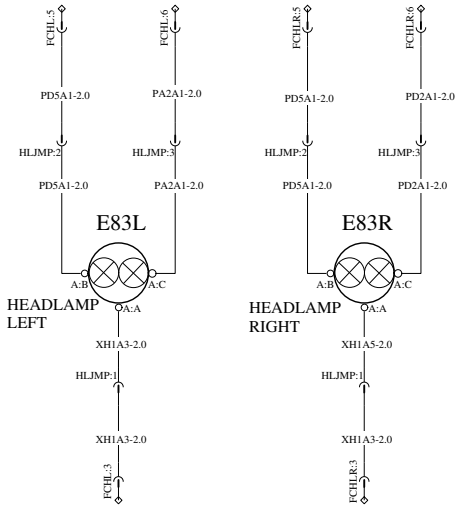

	Document title	Document No	Issue	Volume	Page
Volvo Truck Corporation	WIRING DIAGRAM, 12V MACK CONVENTIONAL Document type PRODUCT SCHEMATIC	23970505	03	1 (1)	50 (105)

TAIL LAMPS W/ ALARM

WIRING DIAGRAM: GF

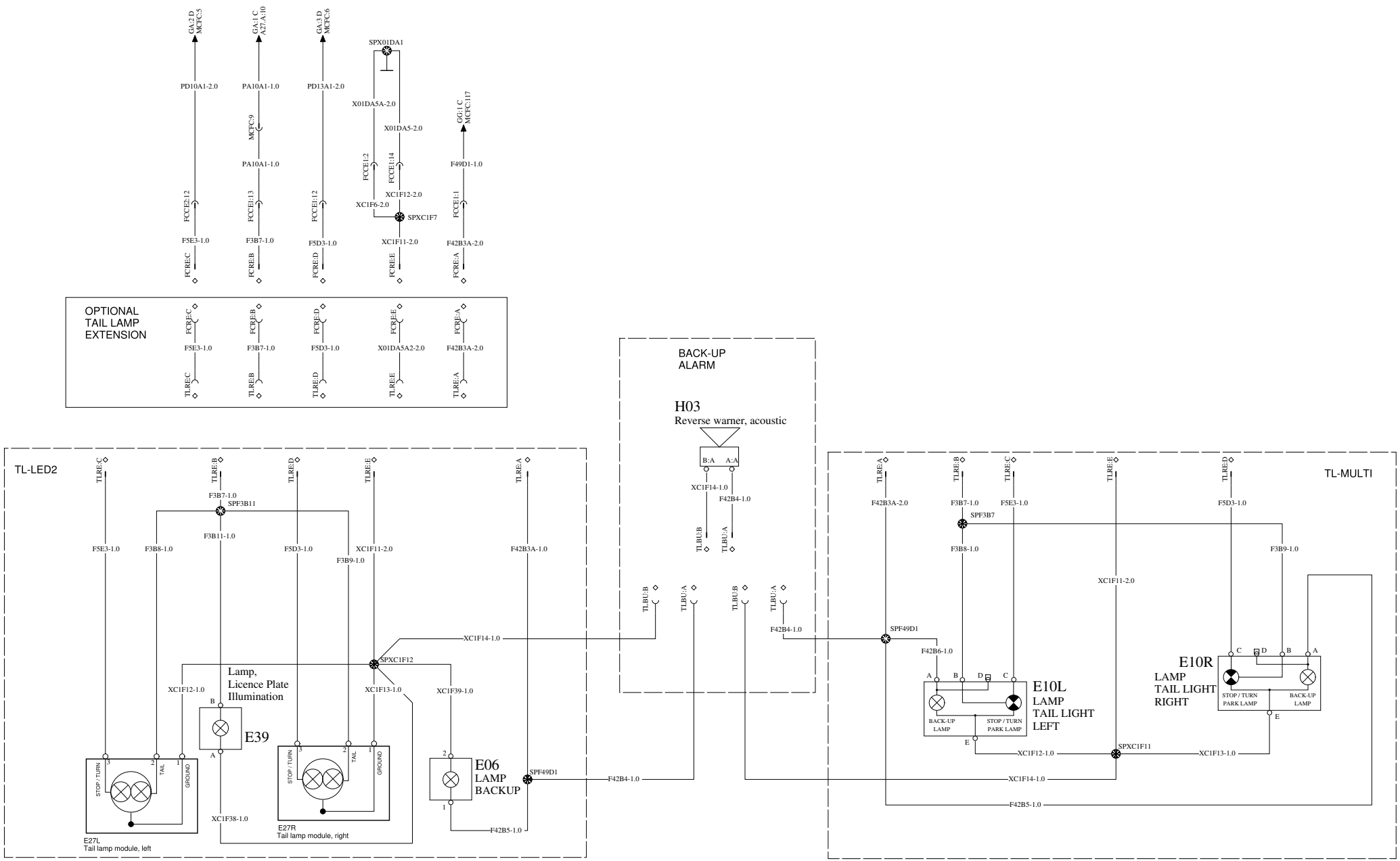

Volvo Truck Corporation	Document title WIRING DIAGRAM, 12V MACK CONVENTIONAL Document type PRODUCT SCHEMATIC	Document No 23970505	Issue 03	Volume 1 (1)	Page 51 (105)

LIGHT CONTROL - BACK UP LAMPS

WIRING DIAGRAM: GG

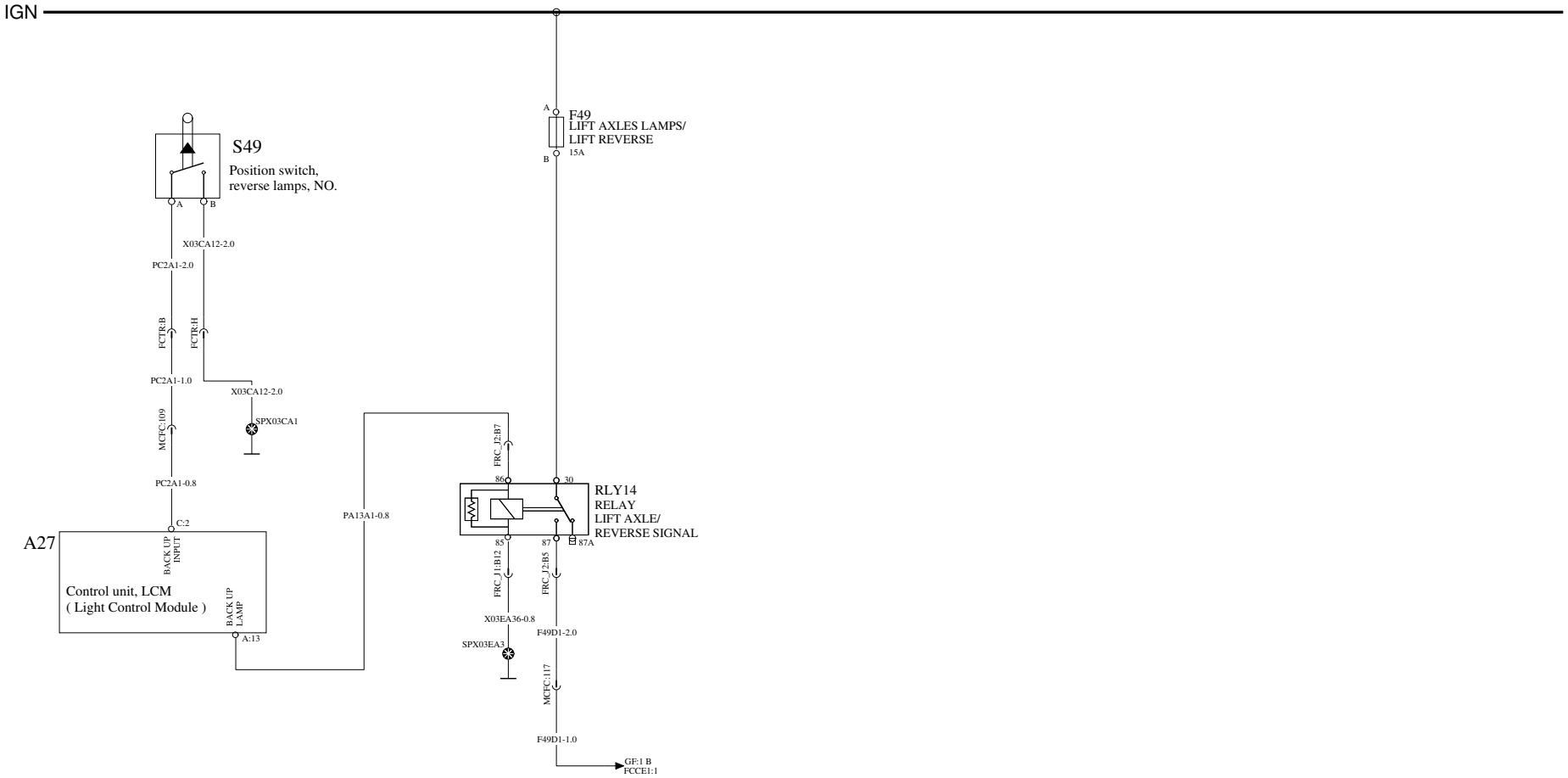

Volvo Truck Corporation	Document title WIRING DIAGRAM, 12V MACK CONVENTIONAL Document type PRODUCT SCHEMATIC	Document No 23970505	Issue 03	Volume 1 (1)	Page 52 (105)

SIDE REPEATER/MARKER OPTIONS

WIRING DIAGRAM: GH

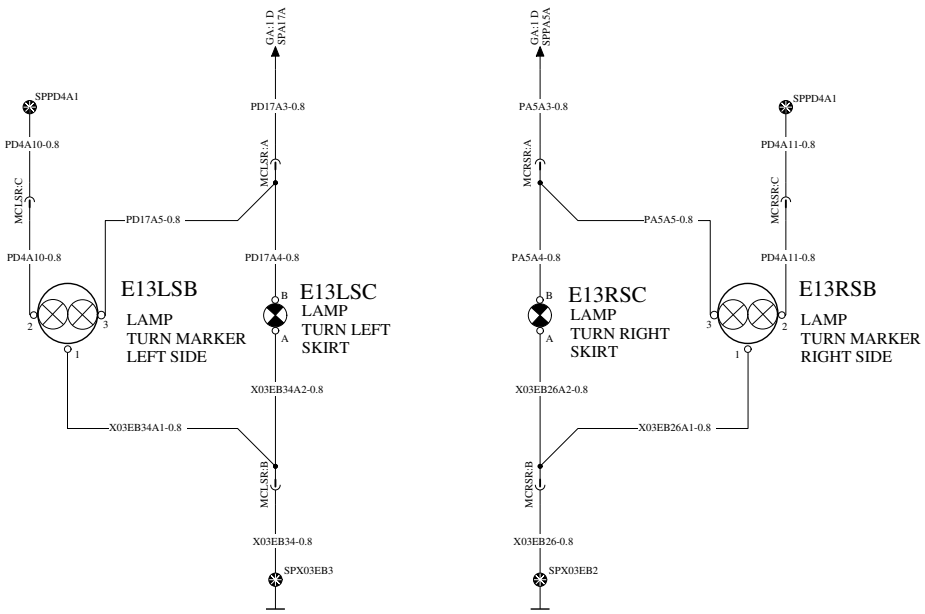

Volvo Truck Corporation	Document title WIRING DIAGRAM, 12V MACK CONVENTIONAL Document type PRODUCT SCHEMATIC	Document No 23970505	Issue 03	Volume 1 (1)	Page 53 (105)

SNOW PLOW PREP

WIRING DIAGRAM: GI

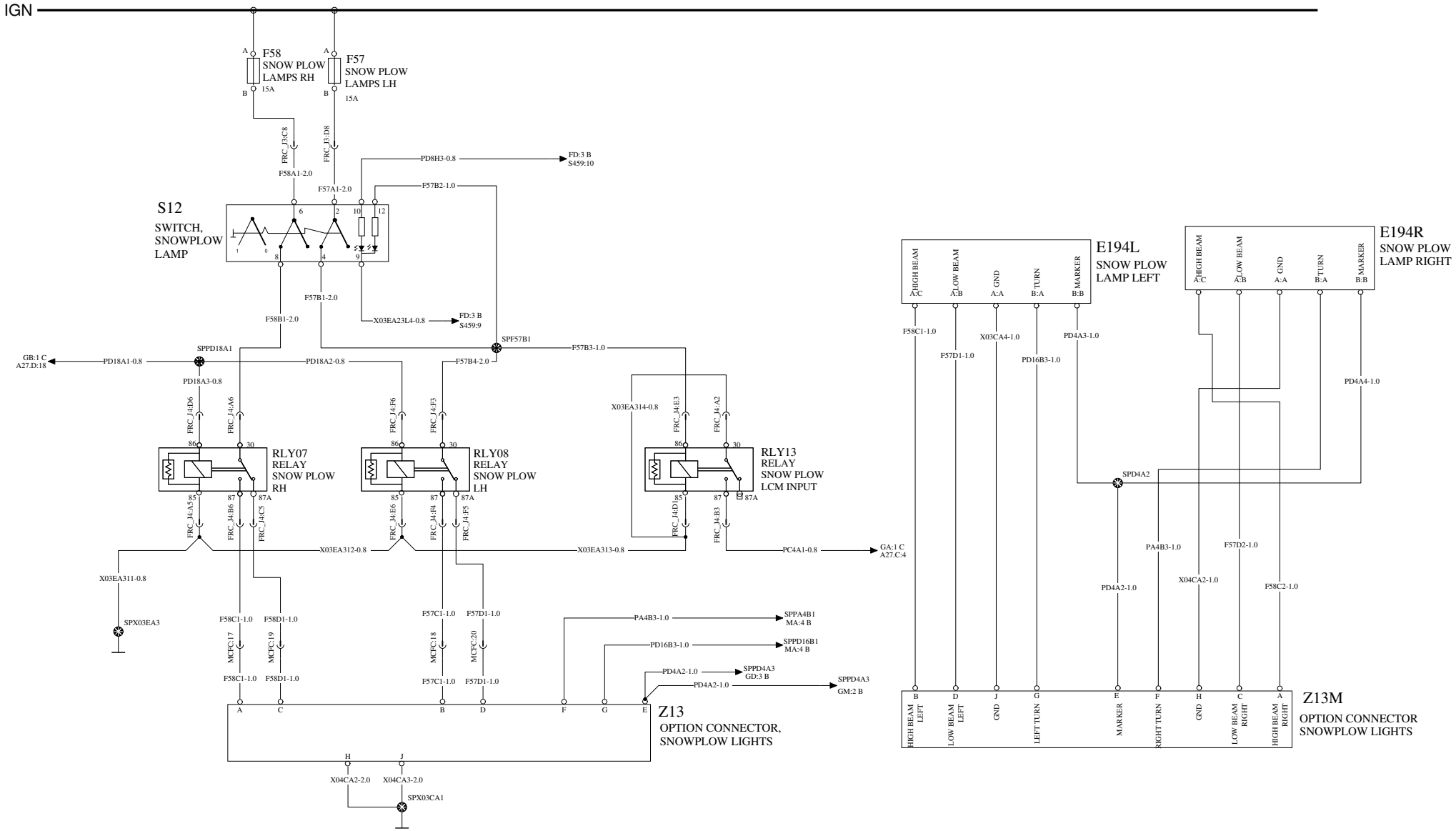

Volvo Truck Corporation	Document title WIRING DIAGRAM, 12V MACK CONVENTIONAL Document type PRODUCT SCHEMATIC	Document No 23970505	Issue 03	Volume 1 (1)	Page 54 (105)

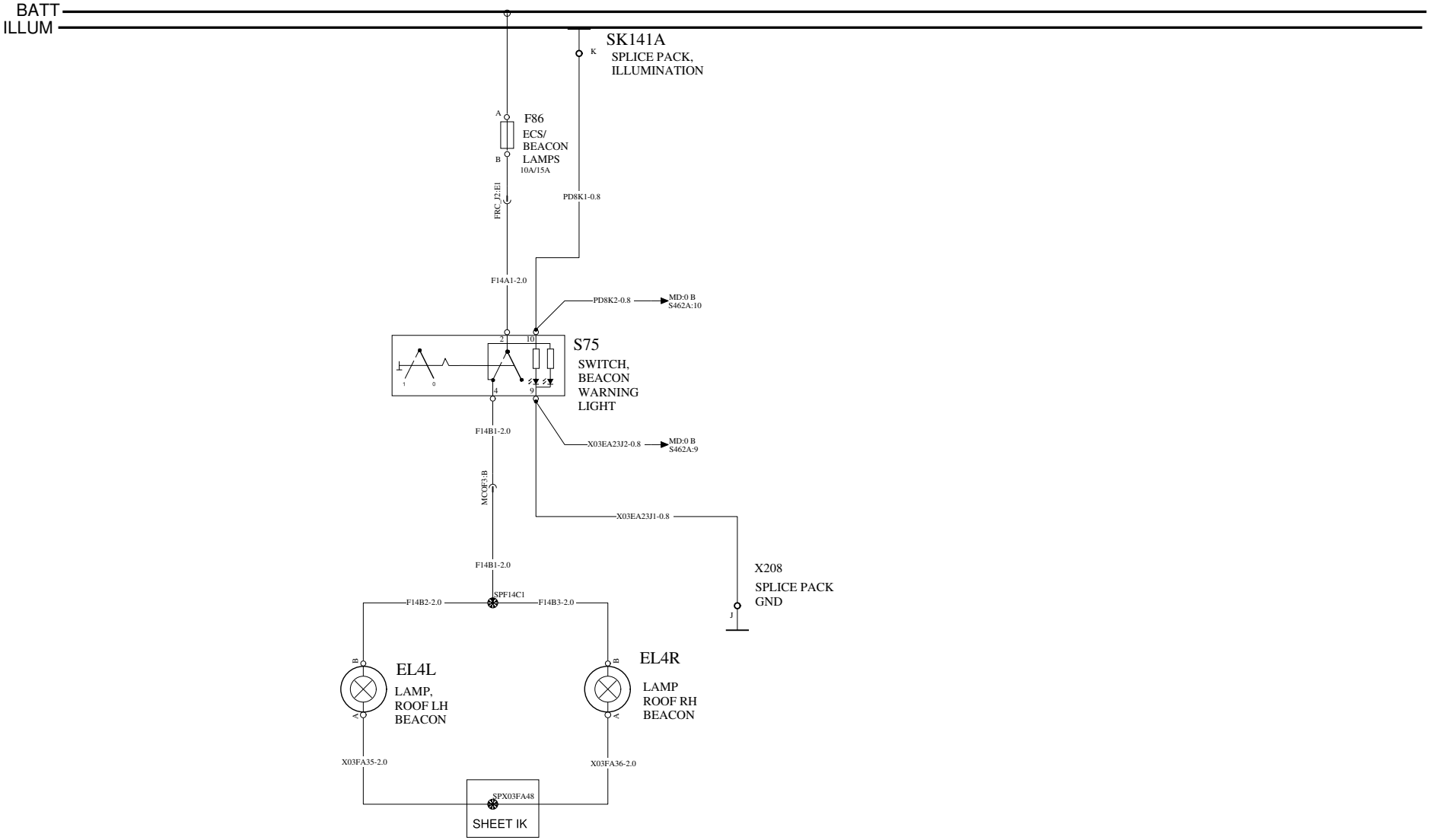
BATT
ILLUM
SK141A
SPLICE PACK,
ILLUMINATION
K
A
F86
ECS/
BEACON
LAMPS
10A/15A
B
FRC_J2:E1
PD8K1-0.8
F14A1-2.0
PD8K2-0.8
MD:0 B
S462A:10
2
10
S75
SWITCH,
BEACON
WARNING
LIGHT
1
0
4
9
F14B1-2.0
X03EA23J2-0.8
MD:0 B
S462A:9
MCOF3:B
X03EA23J1-0.8
F14B1-2.0
X208
SPLICE PACK
GND
J
SPF14C1
F14B2-2.0
F14B3-2.0
B
EL4L
LAMP,
ROOF LH
BEACON
A
B
EL4R
LAMP
ROOF RH
BEACON
A
X03FA35-2.0
X03FA36-2.0
SPX03FA48
SHEET IK

HOOK UP LAMPS

WIRING DIAGRAM: GK

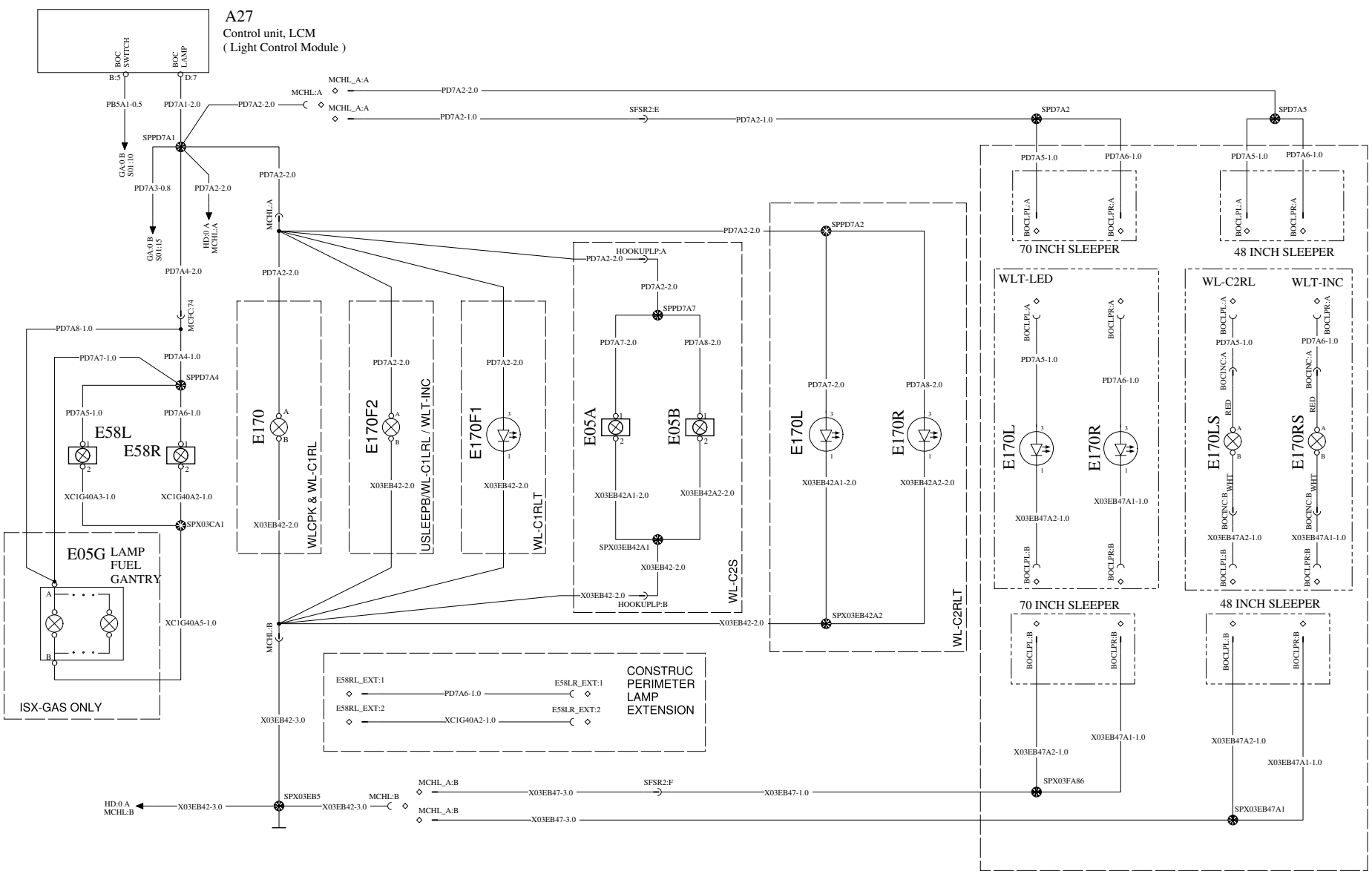

Volvo Truck Corporation	Document title WIRING DIAGRAM, 12V MACK CONVENTIONAL Document type PRODUCT SCHEMATIC	Document No 23970505	Issue 03	Volume 1 (1)	Page 56 (105)

FOG LIGHTS

WIRING DIAGRAM: GL

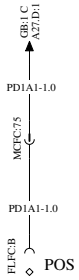

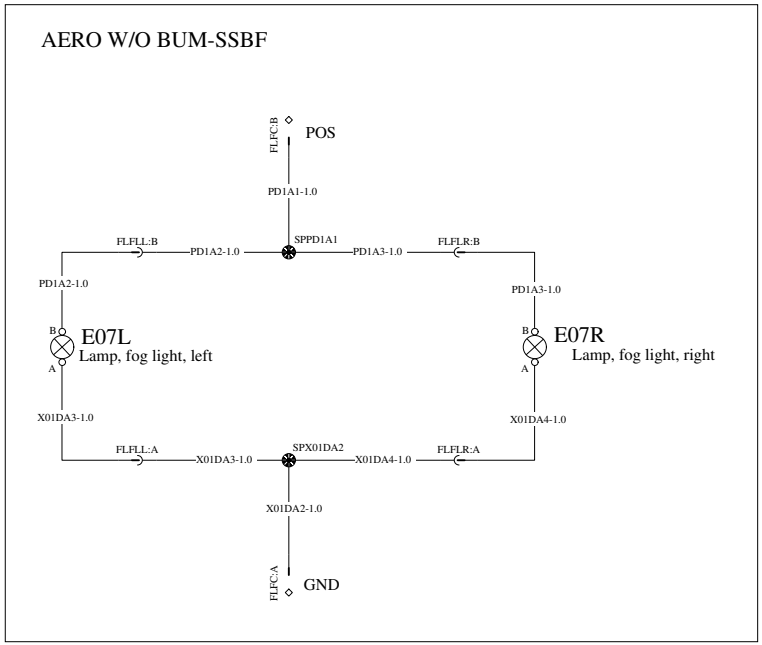

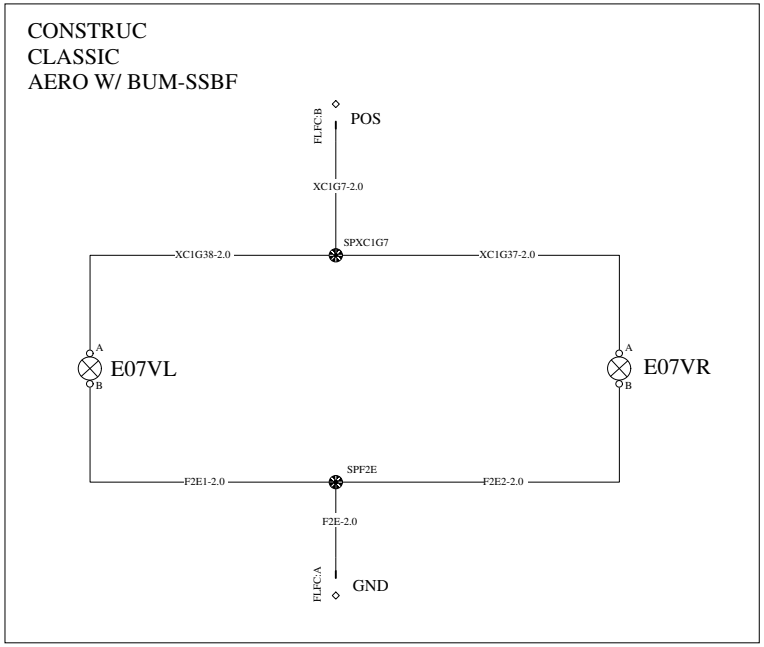

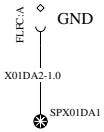

Volvo Truck Corporation	Document title WIRING DIAGRAM, 12V MACK CONVENTIONAL Document type PRODUCT SCHEMATIC	Document No 23970505	Issue 03	Volume 1 (1)	Page 57 (105)

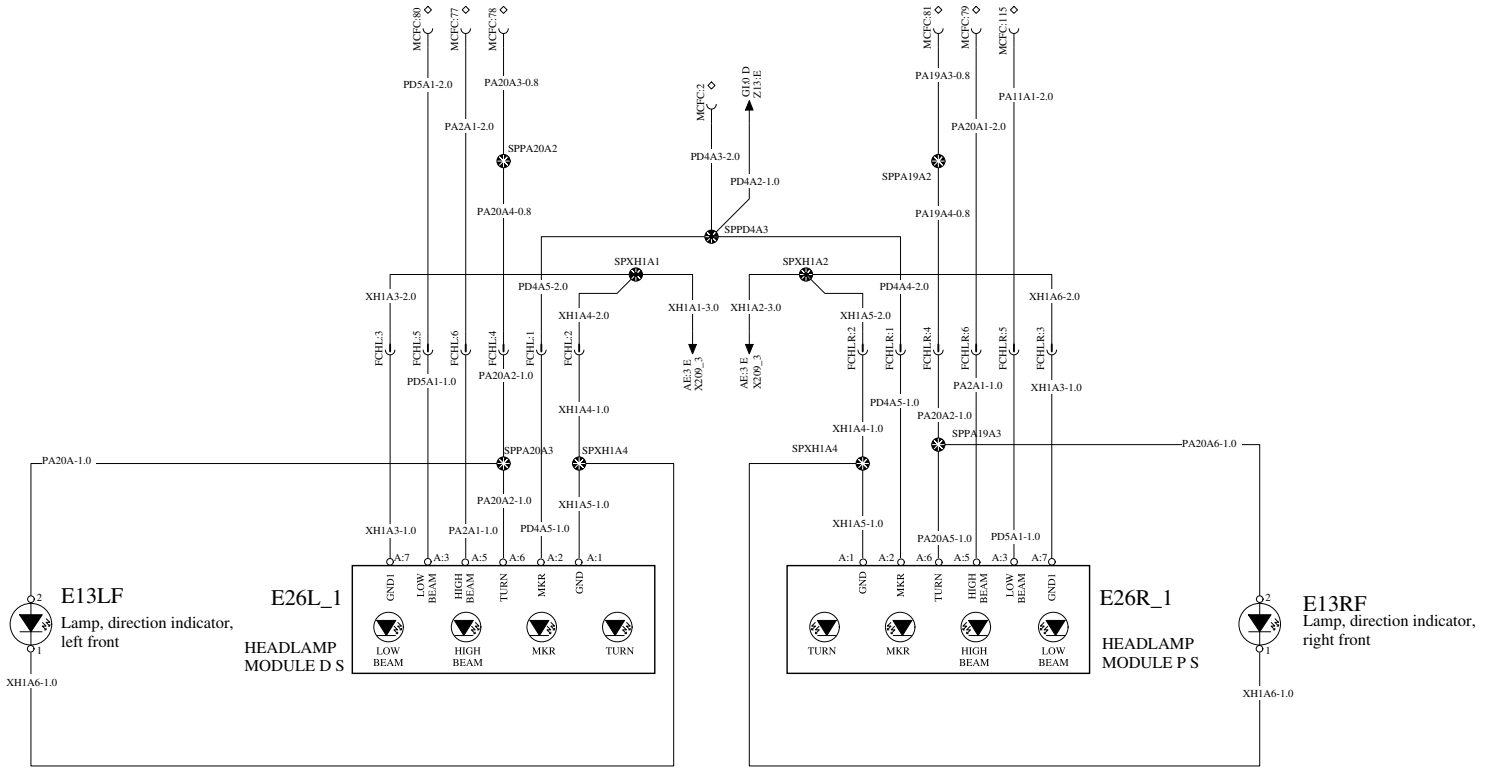

Volvo Truck Corporation	Document title WIRING DIAGRAM, 12V MACK CONVENTIONAL Document type PRODUCT SCHEMATIC	Document No 23970505	Issue 03	Volume 1 (1)	Page 58 (105)

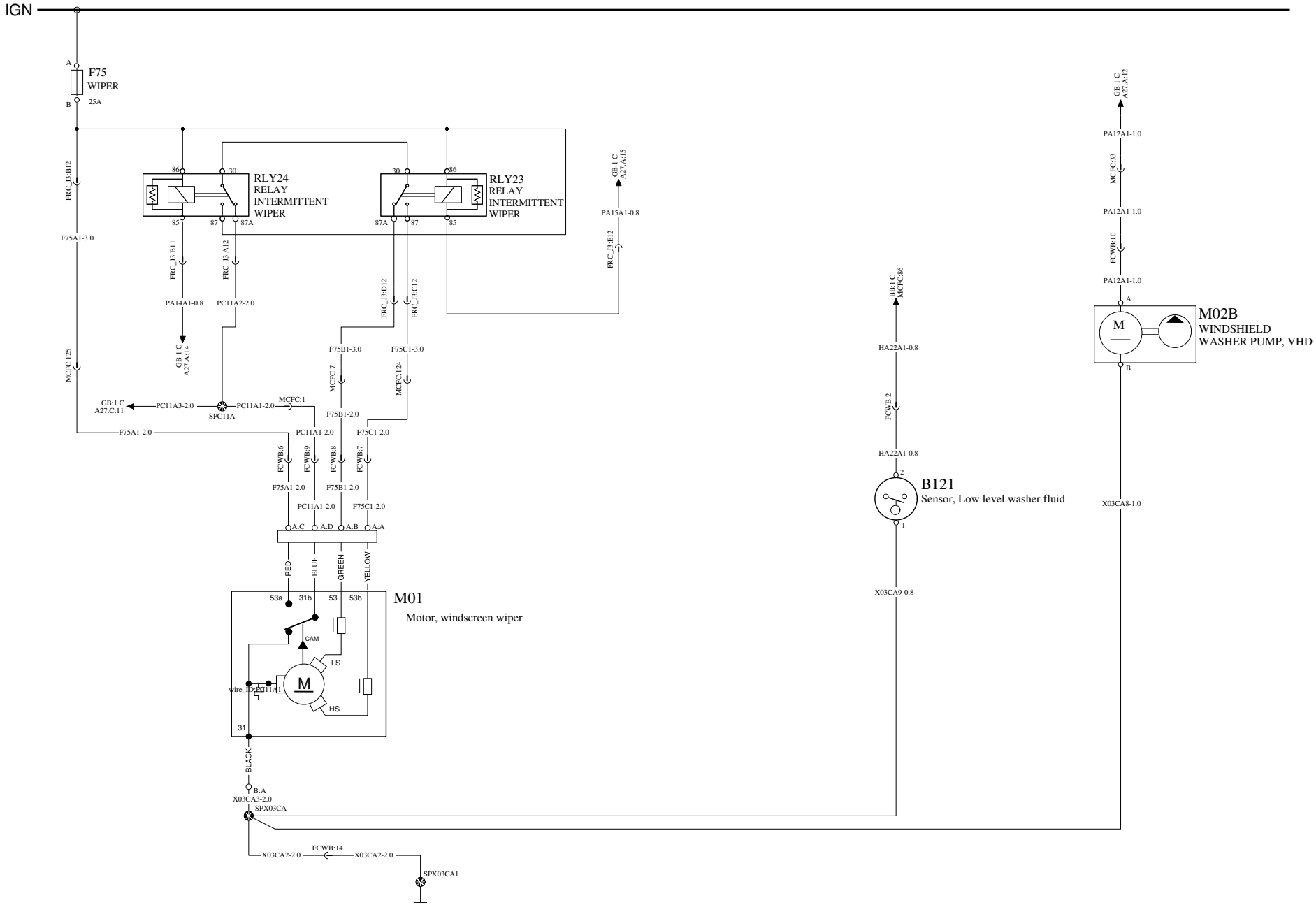

Volvo Truck Corporation	Document title: WIRING DIAGRAM, 12V MACK CONVENTIONAL Document type: PRODUCT SCHEMATIC	Document No: 23970505	Issue: 03	Volume: 1 (1)	Page: 59 (105)

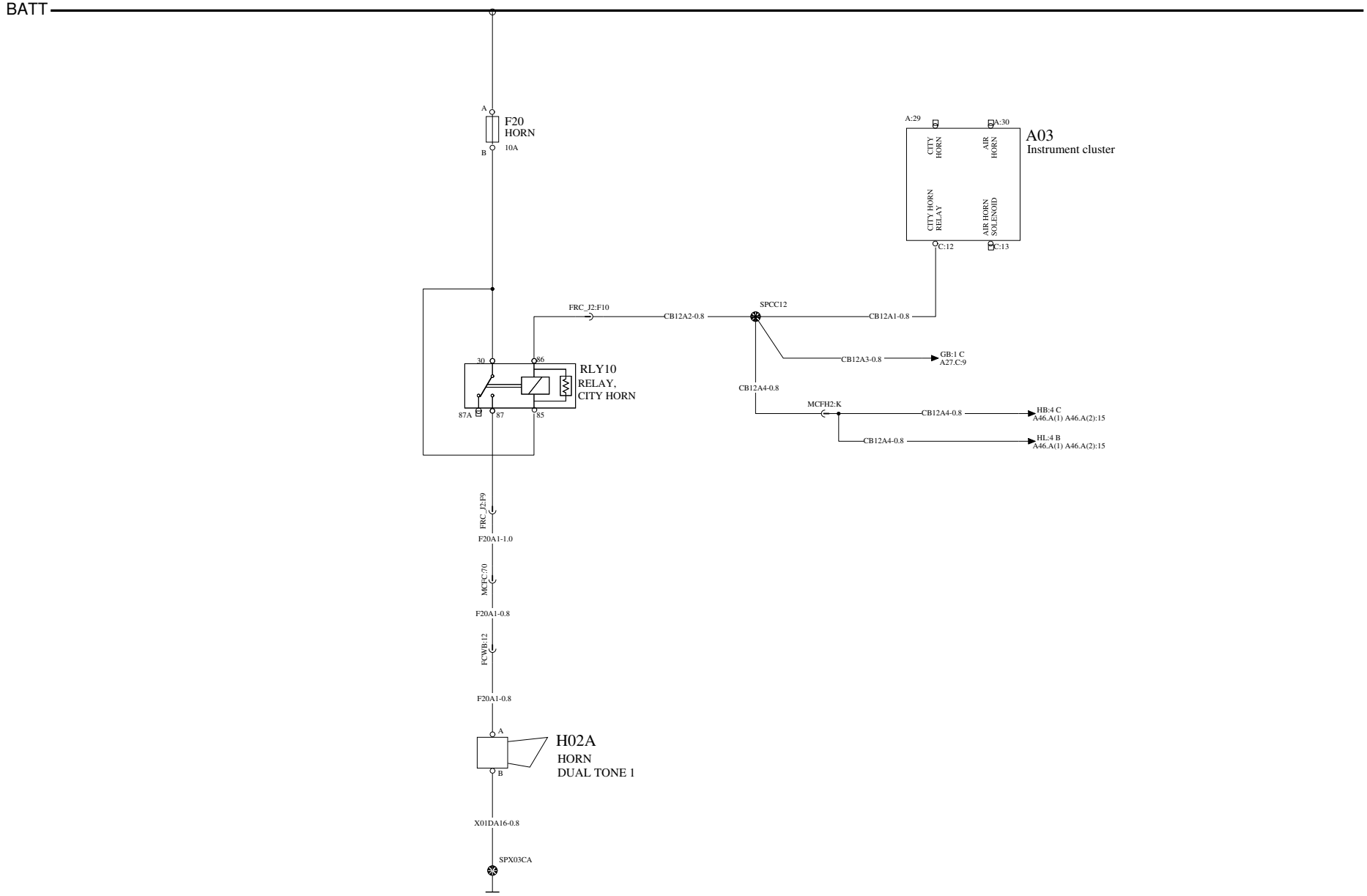

	Document title	Document No	Issue	Volume	Page
Volvo Truck Corporation	WIRING DIAGRAM, 12V MACK CONVENTIONAL Document type PRODUCT SCHEMATIC	23970505	03	1 (1)	60 (105)

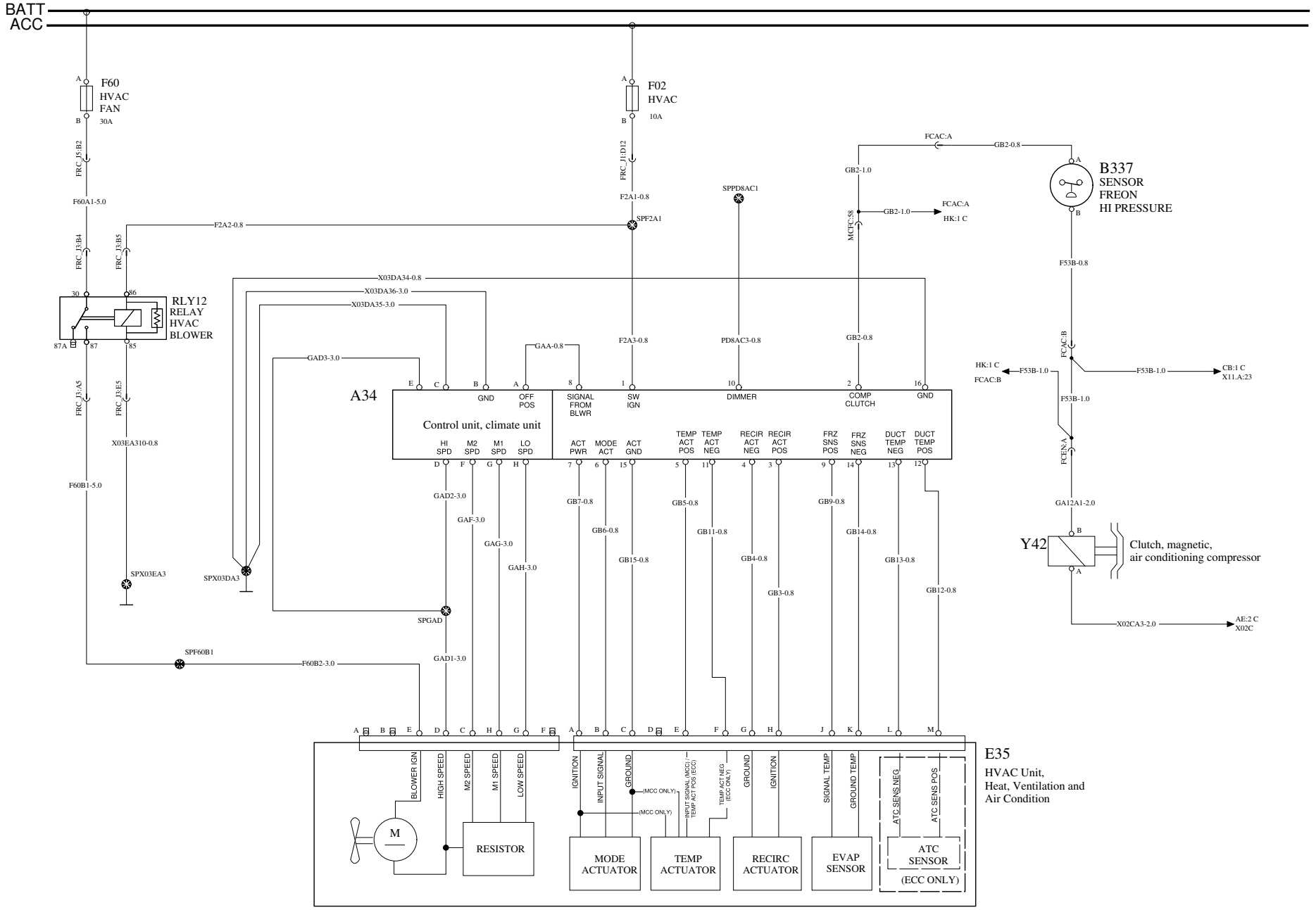

Volvo Truck Corporation	Document title: WIRING DIAGRAM, 12V MACK CONVENTIONAL Document type: PRODUCT SCHEMATIC	Document No: 23970505	Issue: 03	Volume: 1 (1)	Page: 61 (105)

SLEEPER CLIMATE CONTROL W/LECM 70" SLEEPER

WIRING DIAGRAM: HB

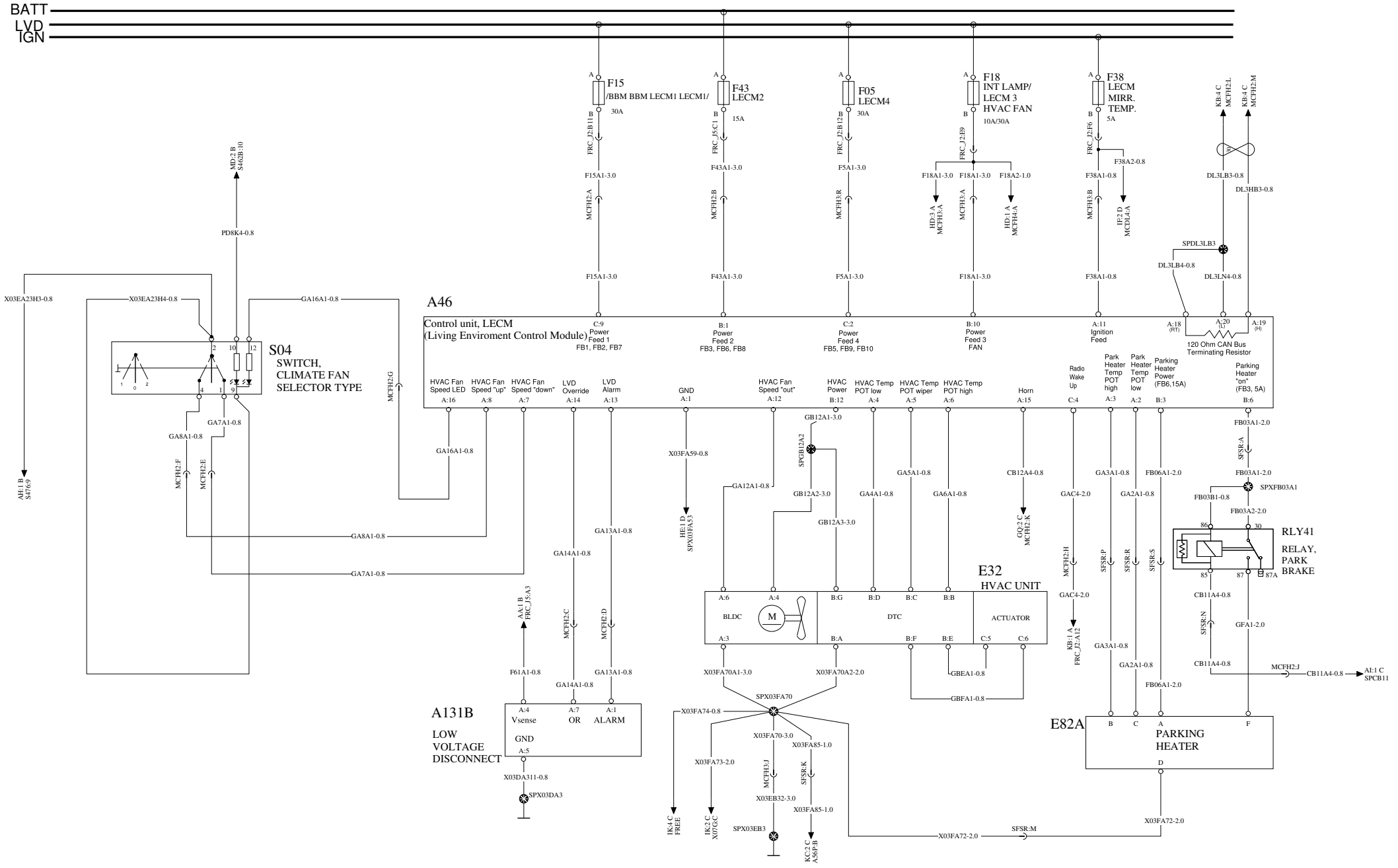

Volvo Truck Corporation	Document title: WIRING DIAGRAM, 12V MACK CONVENTIONAL Document type: PRODUCT SCHEMATIC	Document No: 23970505	Issue: 03	Volume: 1 (1)	Page: 62 (105)

SHORE POWER W/O INVERTER

WIRING DIAGRAM : HC

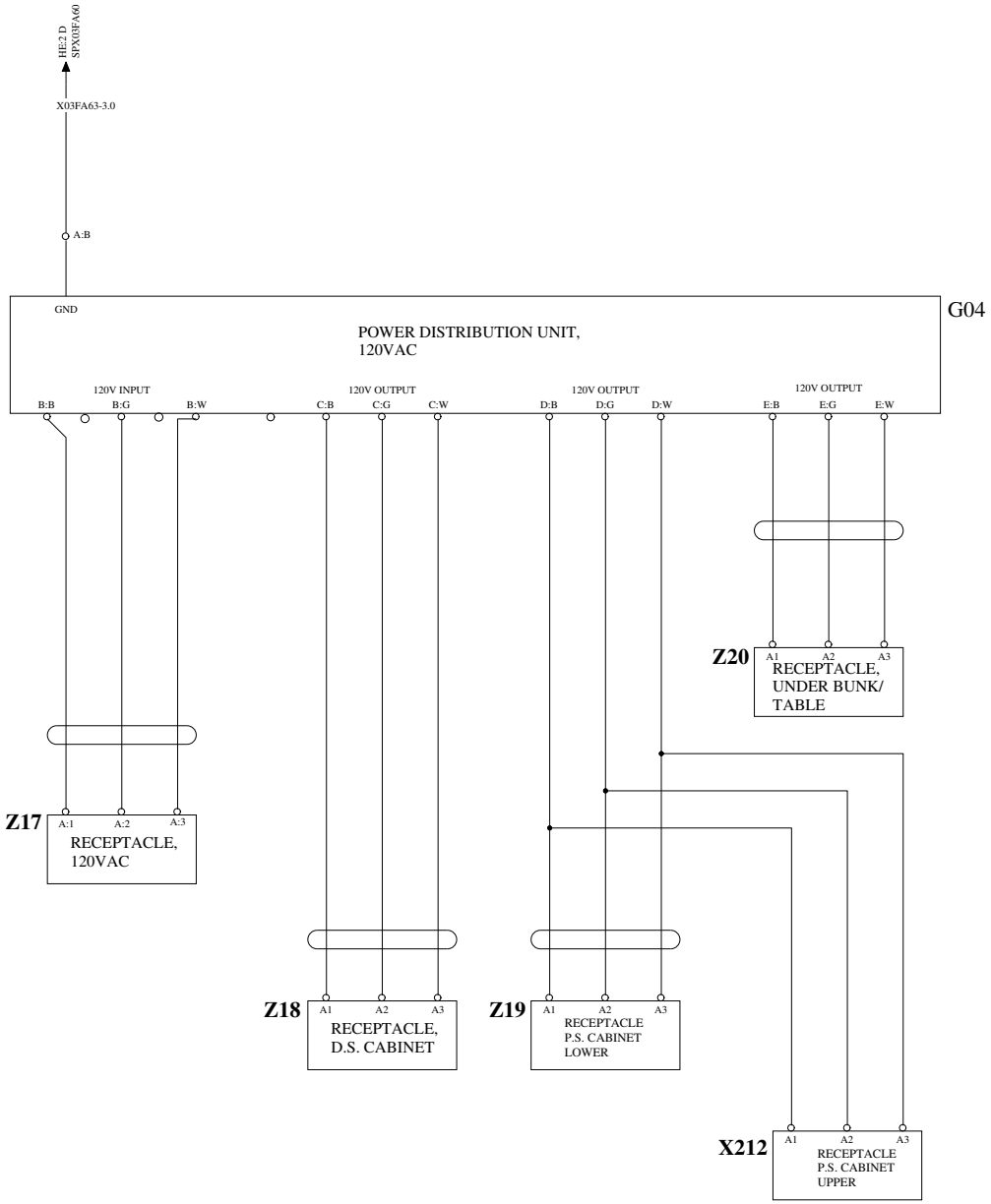

	Document title	Document No	Issue	Volume	Page
Volvo Truck Corporation	WIRING DIAGRAM, 12V MACK CONVENTIONAL	23970505	03	1 (1)	63 (105)
	Document type PRODUCT SCHEMATIC				

SLEEPER FUNCTIONS W/O LECM 48 INCH BASIC

WIRING DIAGRAM: HD

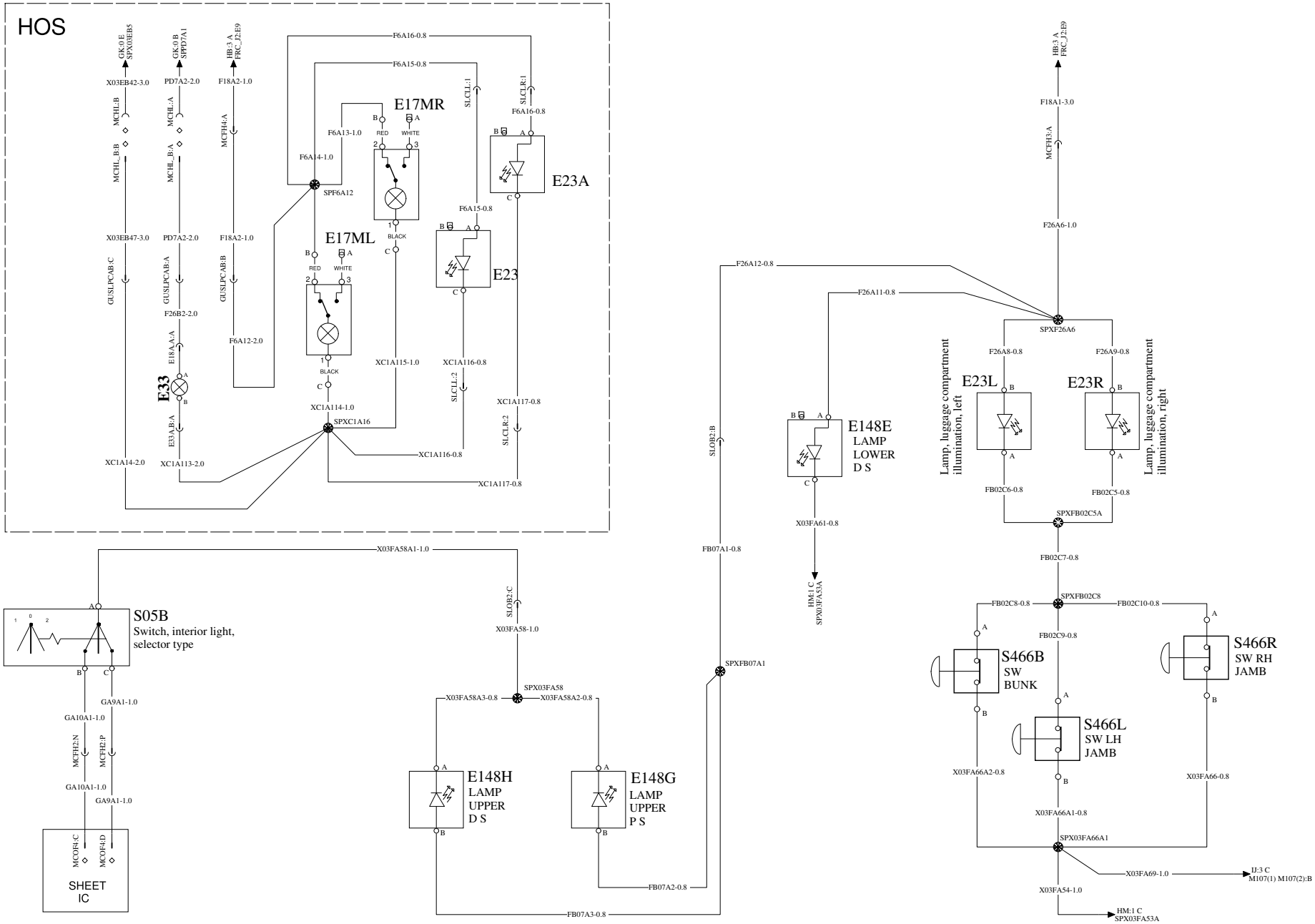

Volvo Truck Corporation	Document title: WIRING DIAGRAM, 12V MACK CONVENTIONAL Document type: PRODUCT SCHEMATIC	Document No: 23970505	Issue: 03	Volume: 1 (1)	Page: 64 (105)

LIGHTING AND POWER OUTLETS 70" SLEEPER

WIRING DIAGRAM: HE

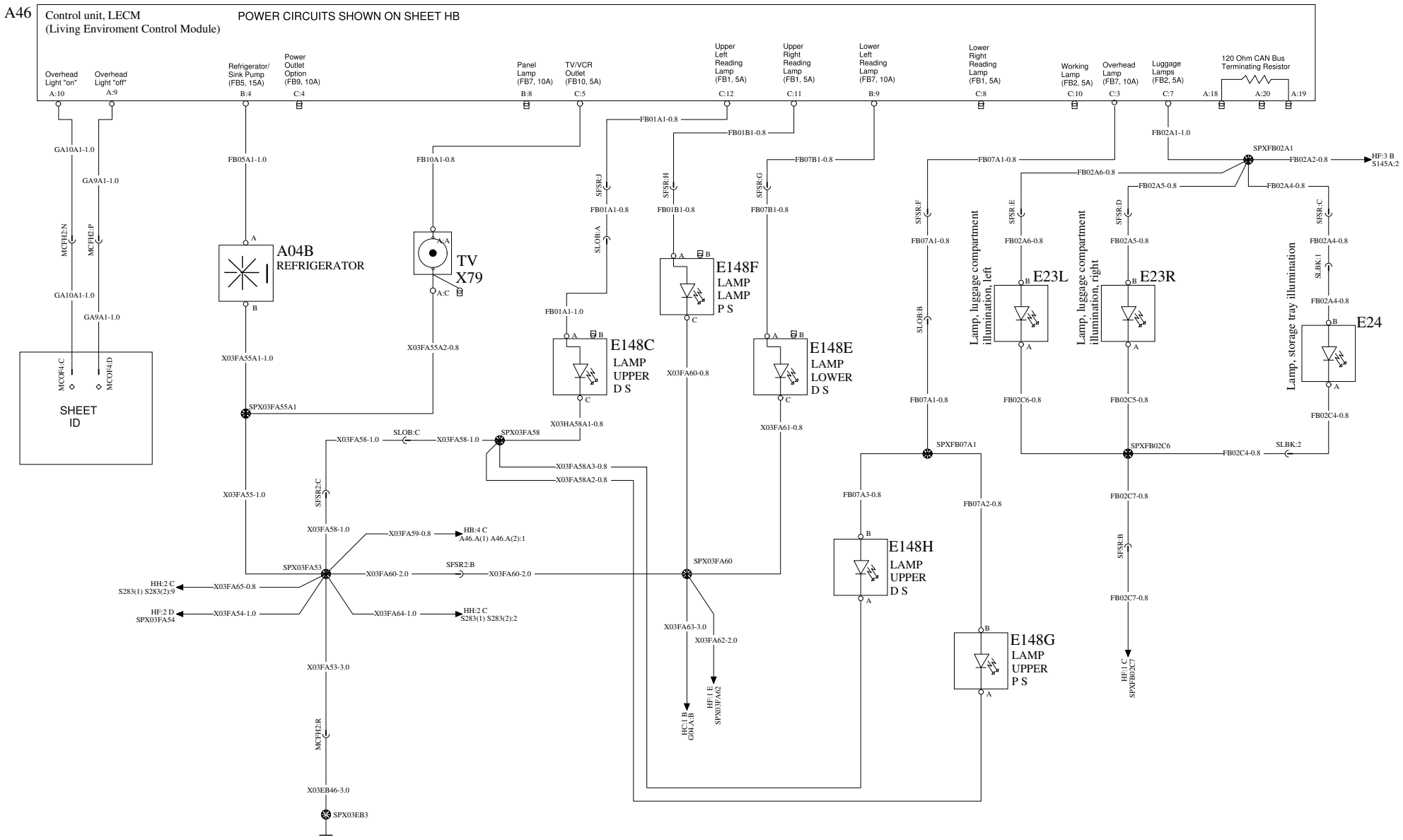

Document title	Document No	Issue	Volume	Page
WIRING DIAGRAM, 12V MACK CONVENTIONAL	23970505	03	1 (1)	65 (105)
Document type: PRODUCT SCHEMATIC				

Volvo Truck Corporation

SLEEPER COURTESY AND UNDER BUNK

WIRING DIAGRAM : HF

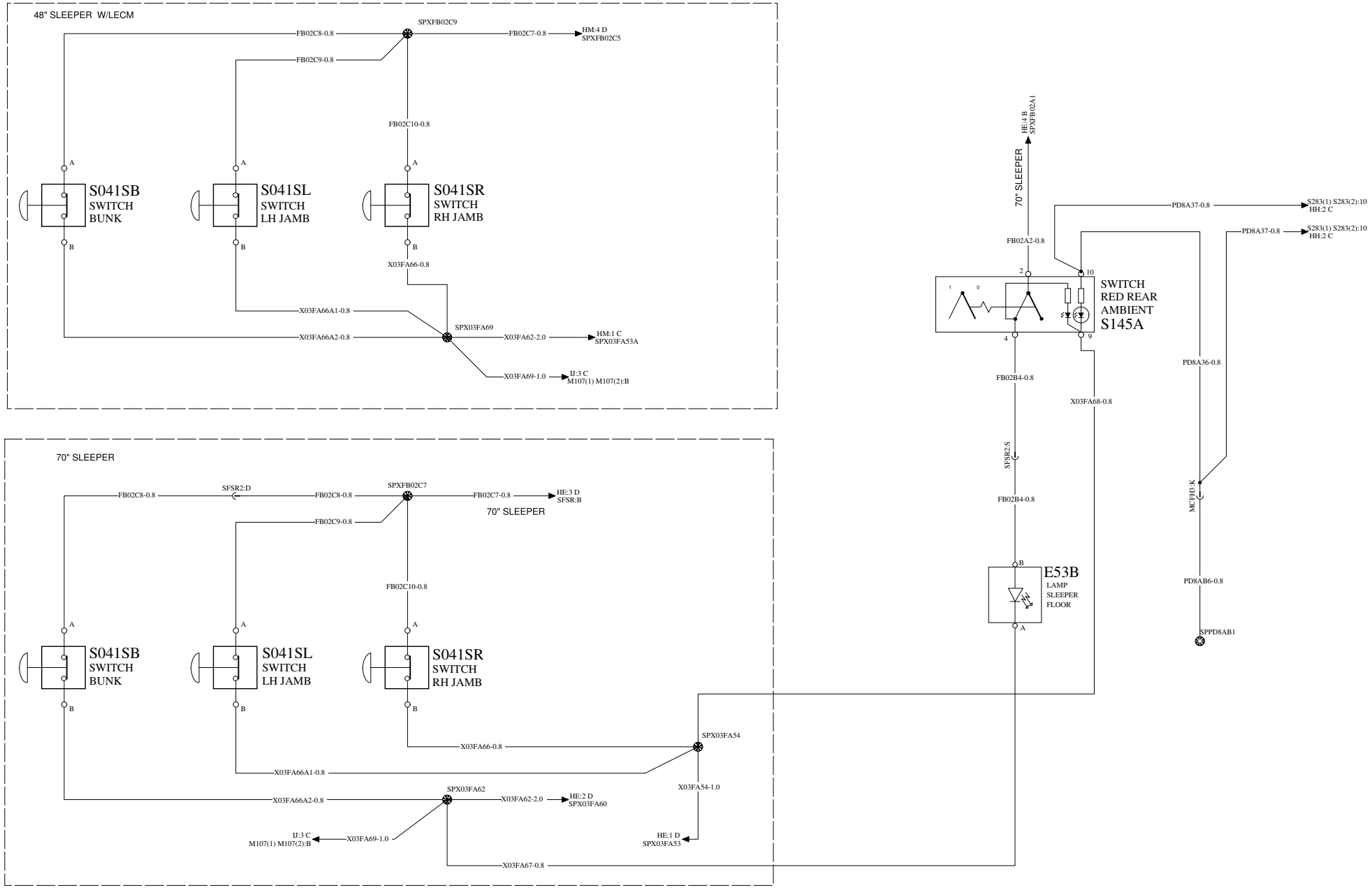

Volvo Truck Corporation	Document title WIRING DIAGRAM, 12V MACK CONVENTIONAL Document type PRODUCT SCHEMATIC	Document No 23970505	Issue 03	Volume 1 (1)	Page 66 (105)

SLEEPER PIPE LIGHTING SWITCH

WIRING DIAGRAM: HH

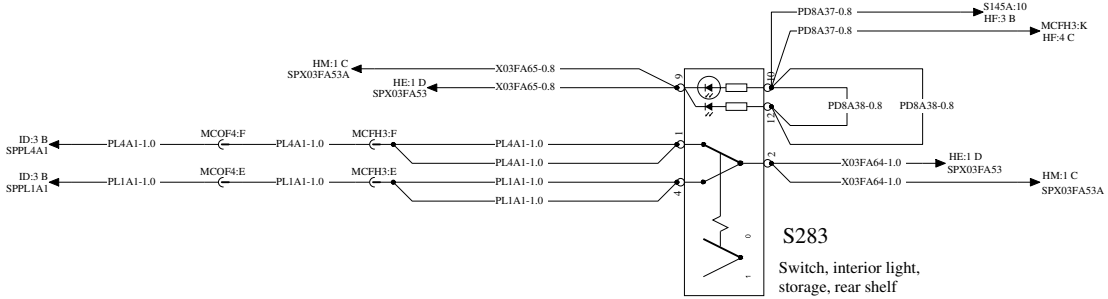

	Document title	Document No	Issue	Volume	Page
Volvo Truck Corporation	WIRING DIAGRAM, 12V MACK CONVENTIONAL Document type PRODUCT SCHEMATIC	23970505	03	1 (1)	67 (105)

SHORE POWER W/INVERTER

WIRING DIAGRAM: HI

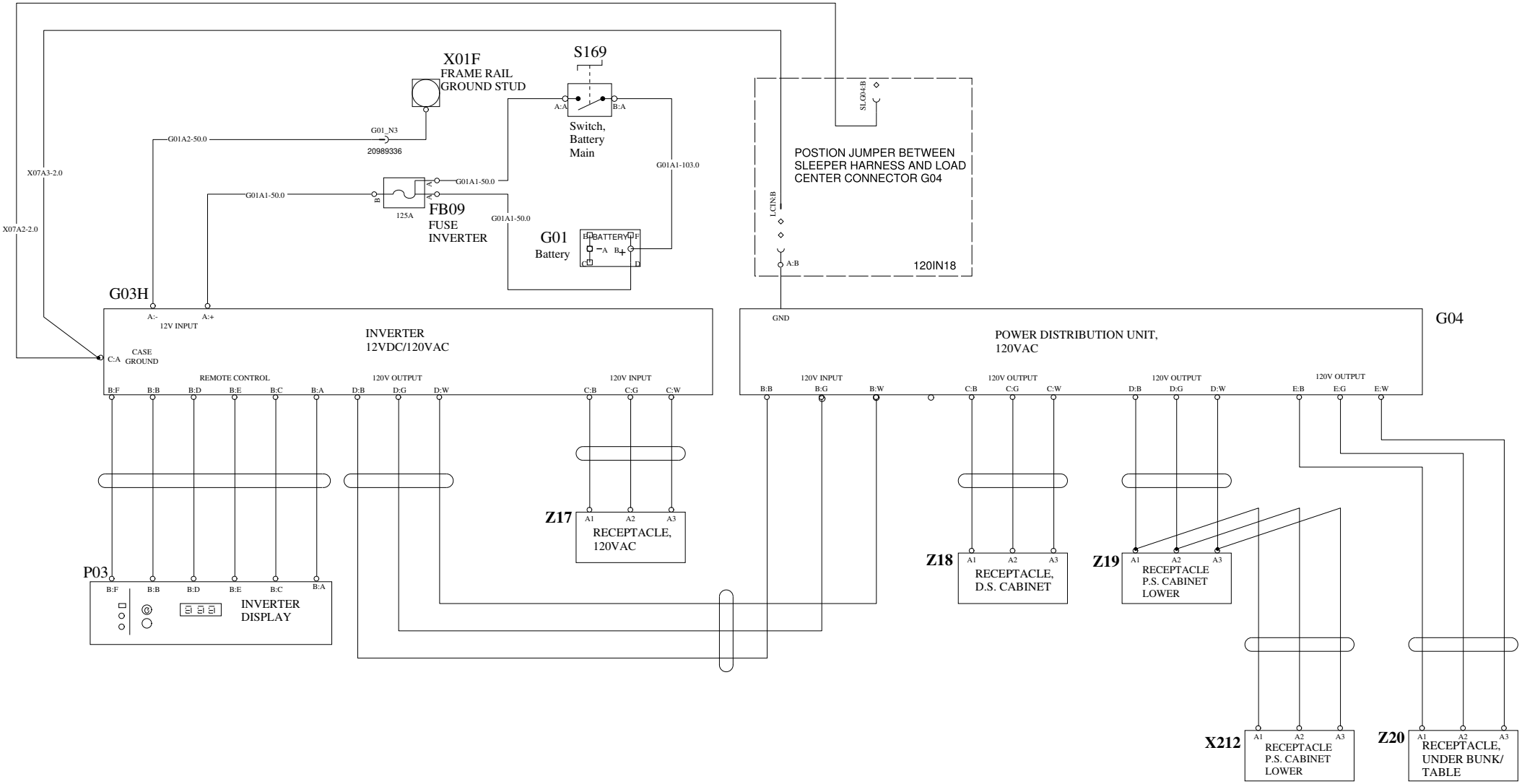

	Document title	Document No	Issue	Volume	Page
Volvo Truck Corporation	WIRING DIAGRAM, 12V MACK CONVENTIONAL	23970505	03	1 (1)	68 (105)
	Document type PRODUCT SCHEMATIC				

AUXILLIARY 12V PARK COOLING SYSTEM

WIRING DIAGRAM: HJ

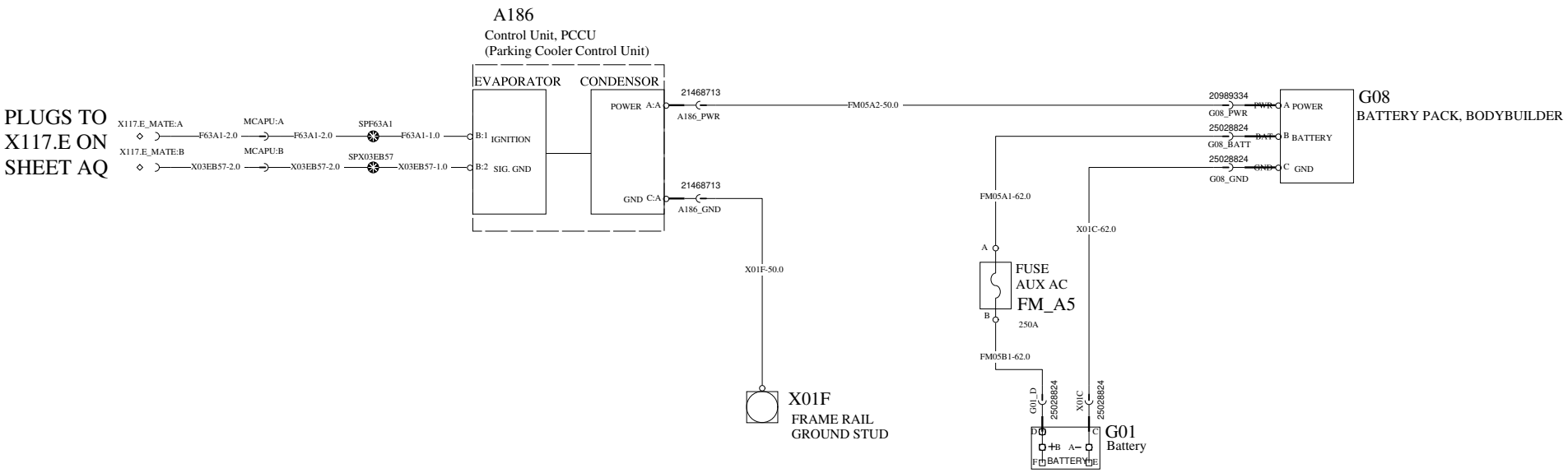

	Document title	Document No	Issue	Volume	Page
Volvo Truck Corporation	WIRING DIAGRAM, 12V MACK CONVENTIONAL Document type PRODUCT SCHEMATIC	23970505	03	1 (1)	69 (105)

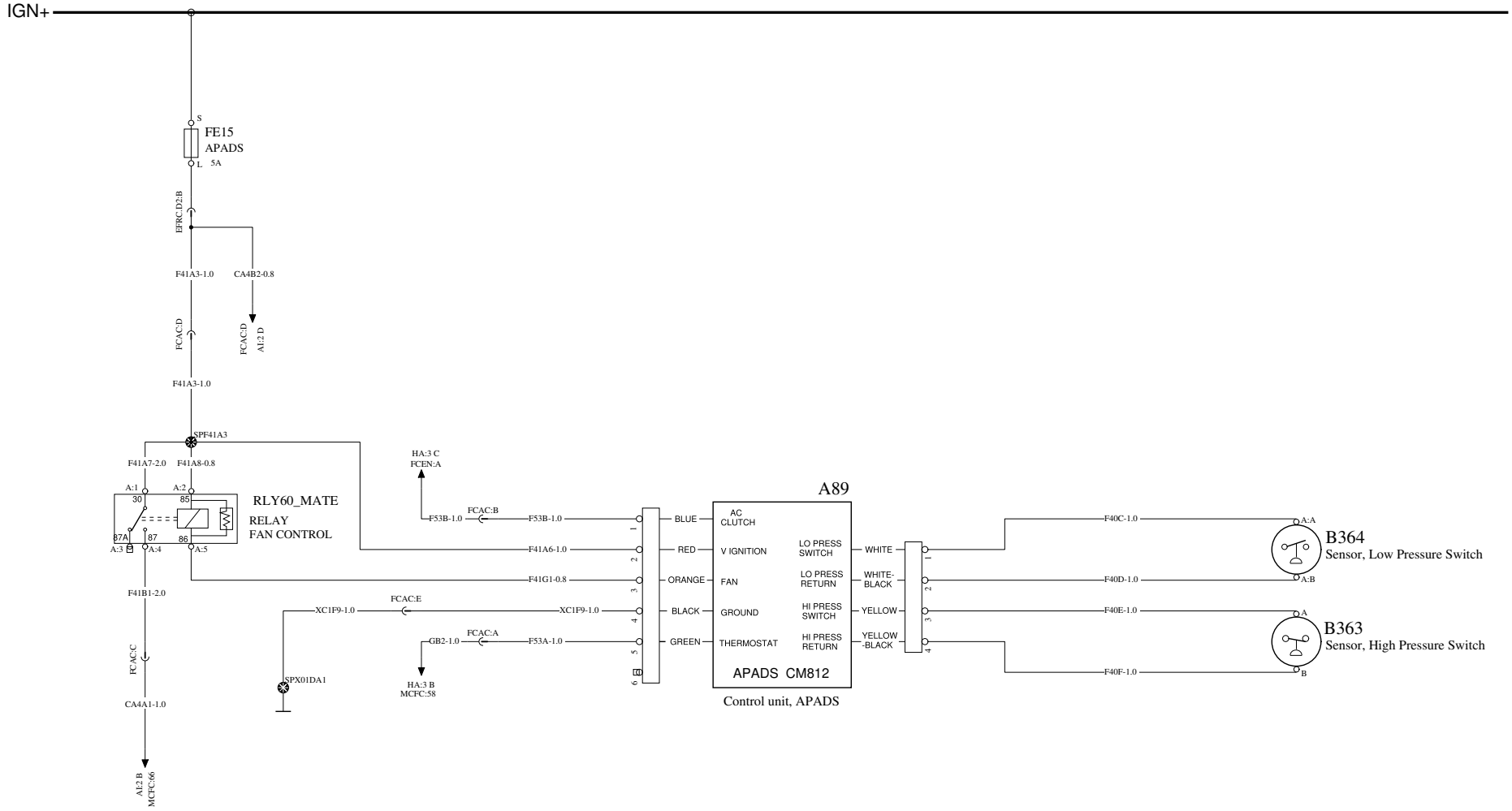

Volvo Truck Corporation	Document title: WIRING DIAGRAM, 12V MACK CONVENTIONAL Document type: PRODUCT SCHEMATIC	Document No: 23970505	Issue: 03	Volume: 1 (1)	Page: 70 (105)

SLEEPER CLIMATE CONTROL W/LECM 48" SLEEPER

WIRING DIAGRAM: HL

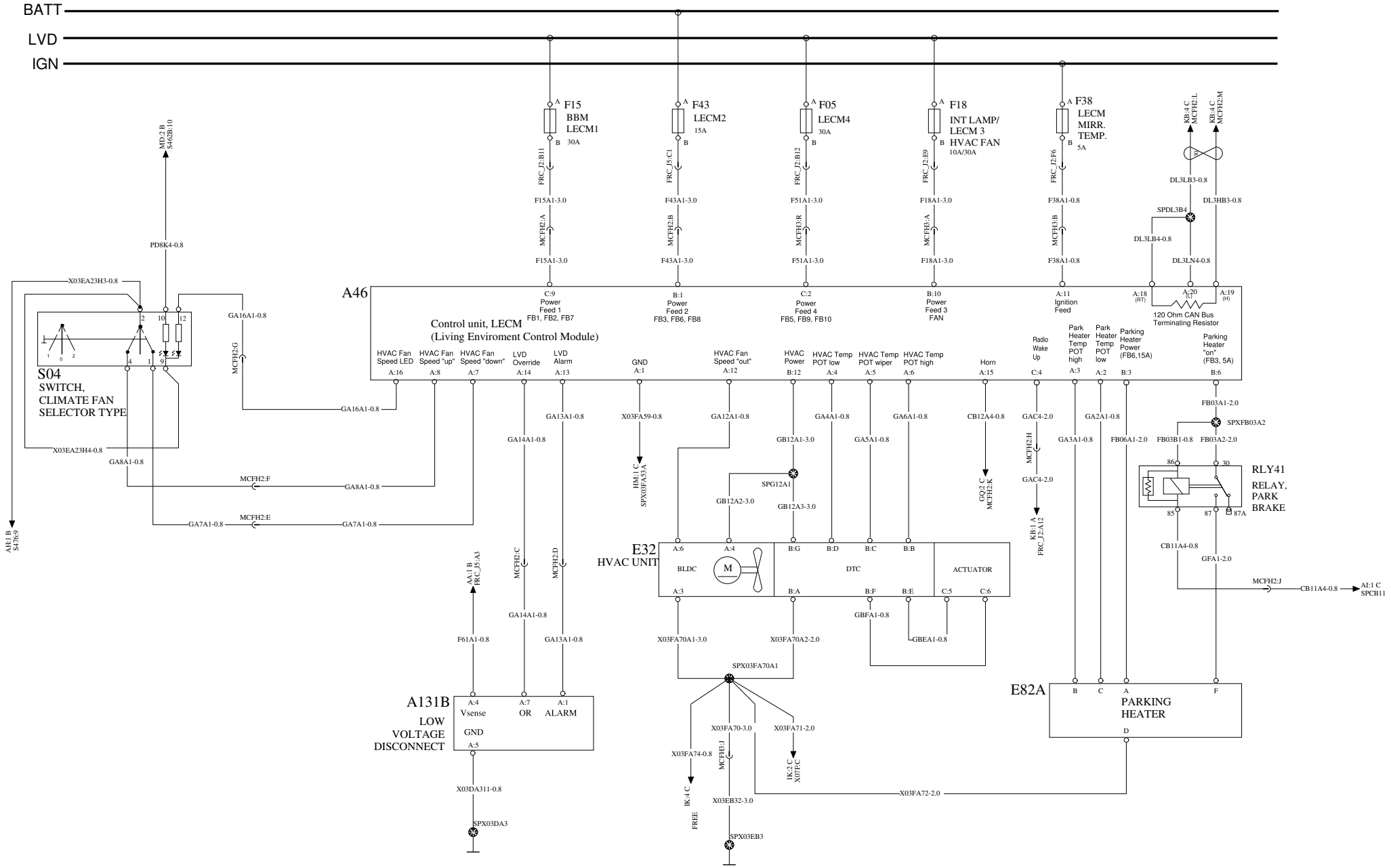

Volvo Truck Corporation	Document title WIRING DIAGRAM, 12V MACK CONVENTIONAL Document type PRODUCT SCHEMATIC	Document No 23970505	Issue 03	Volume 1 (1)	Page 71 (105)

LIGHTING AND POWER OUTLETS 48" SLEEPER

WIRING DIAGRAM: HM

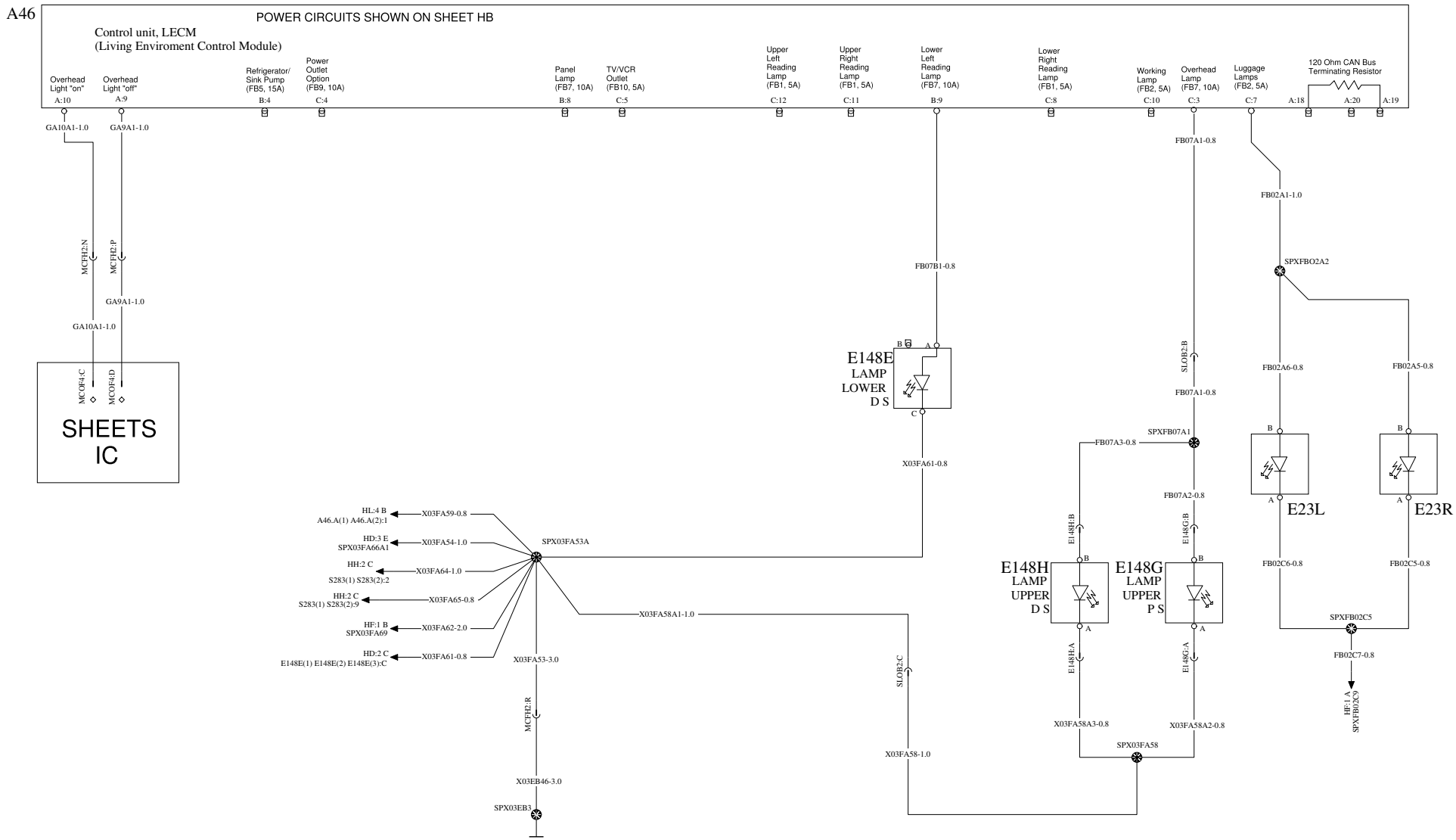

Volvo Truck Corporation	Document title WIRING DIAGRAM, 12V MACK CONVENTIONAL Document type PRODUCT SCHEMATIC	Document No 23970505	Issue 03	Volume 1 (1)	Page 72 (105)

COURTESY LIGHTS - DRIVING COMPARMENT

WIRING DIAGRAM: IA

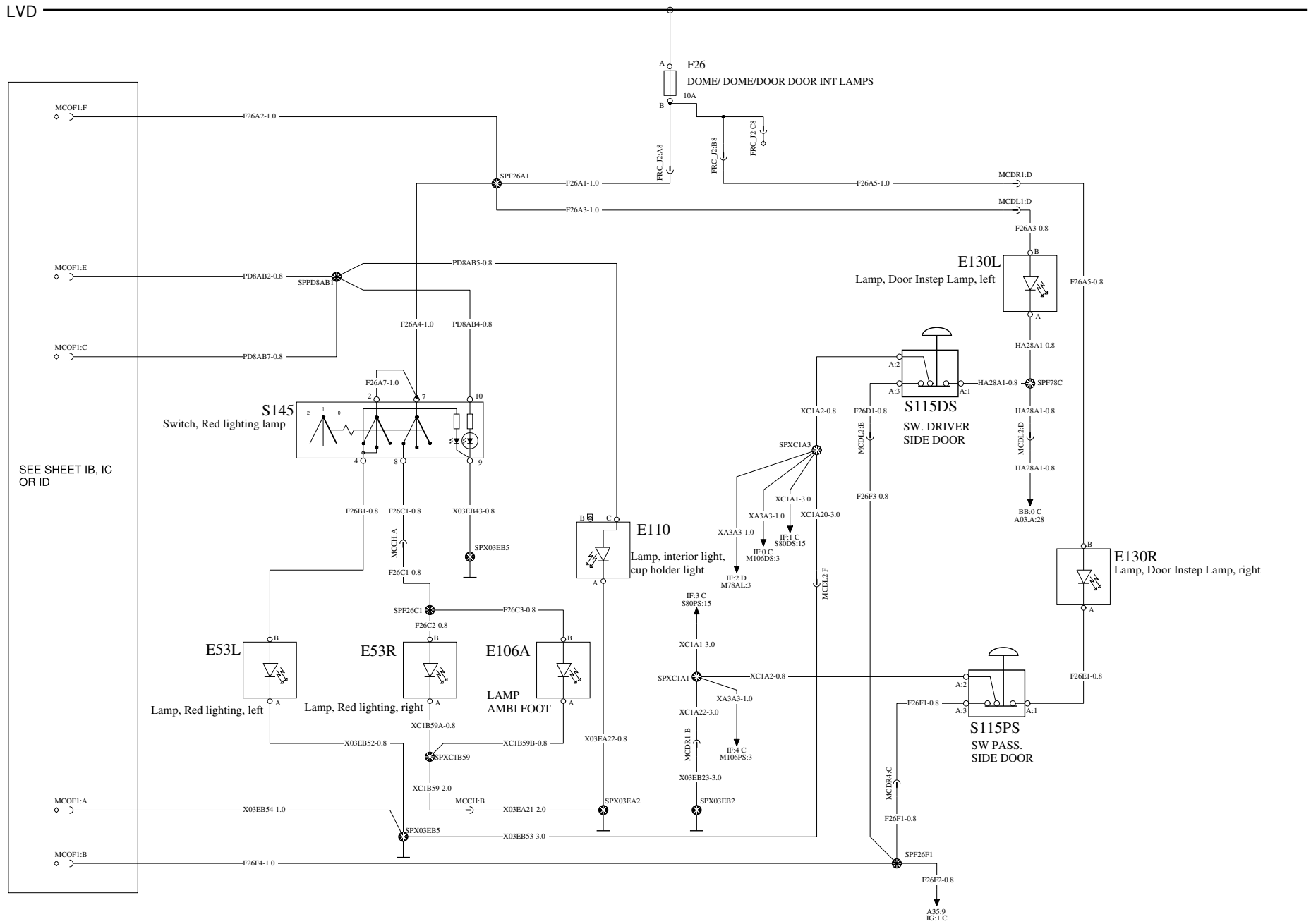

Volvo Truck Corporation	Document title WIRING DIAGRAM, 12V MACK CONVENTIONAL Document type PRODUCT SCHEMATIC	Document No 23970505	Issue 03	Volume 1 (1)	Page 73 (105)

COURTESY LIGHTS - DAYCAB AND HOS SLEEPER

WIRING DIAGRAM: IB

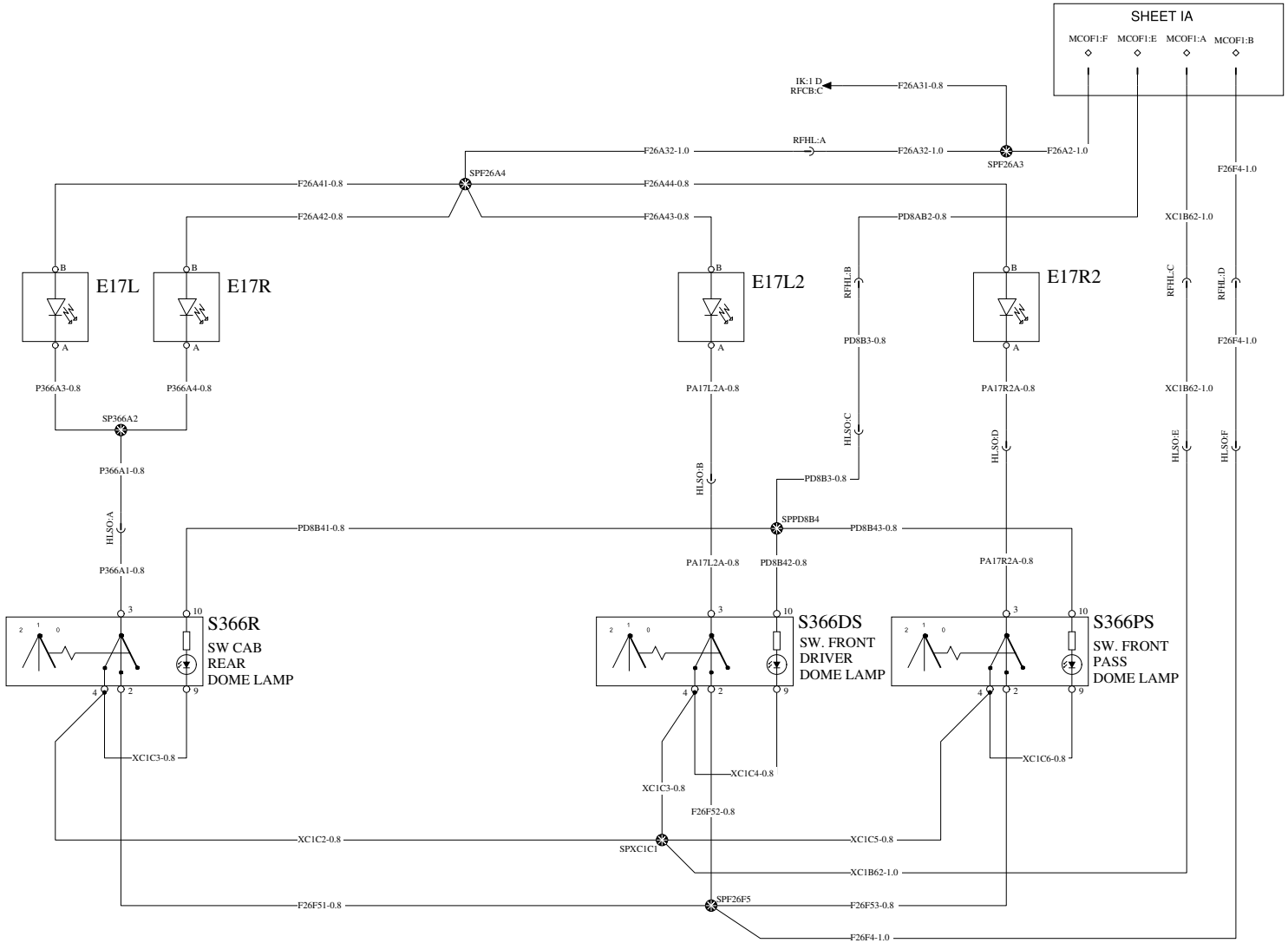

Volvo Truck Corporation	Document title WIRING DIAGRAM, 12V MACK CONVENTIONAL Document type PRODUCT SCHEMATIC	Document No 23970505	Issue 03	Volume 1 (1)	Page 74 (105)

COURTESY LIGHTS - 48" SLEEPER

WIRING DIAGRAM: IC

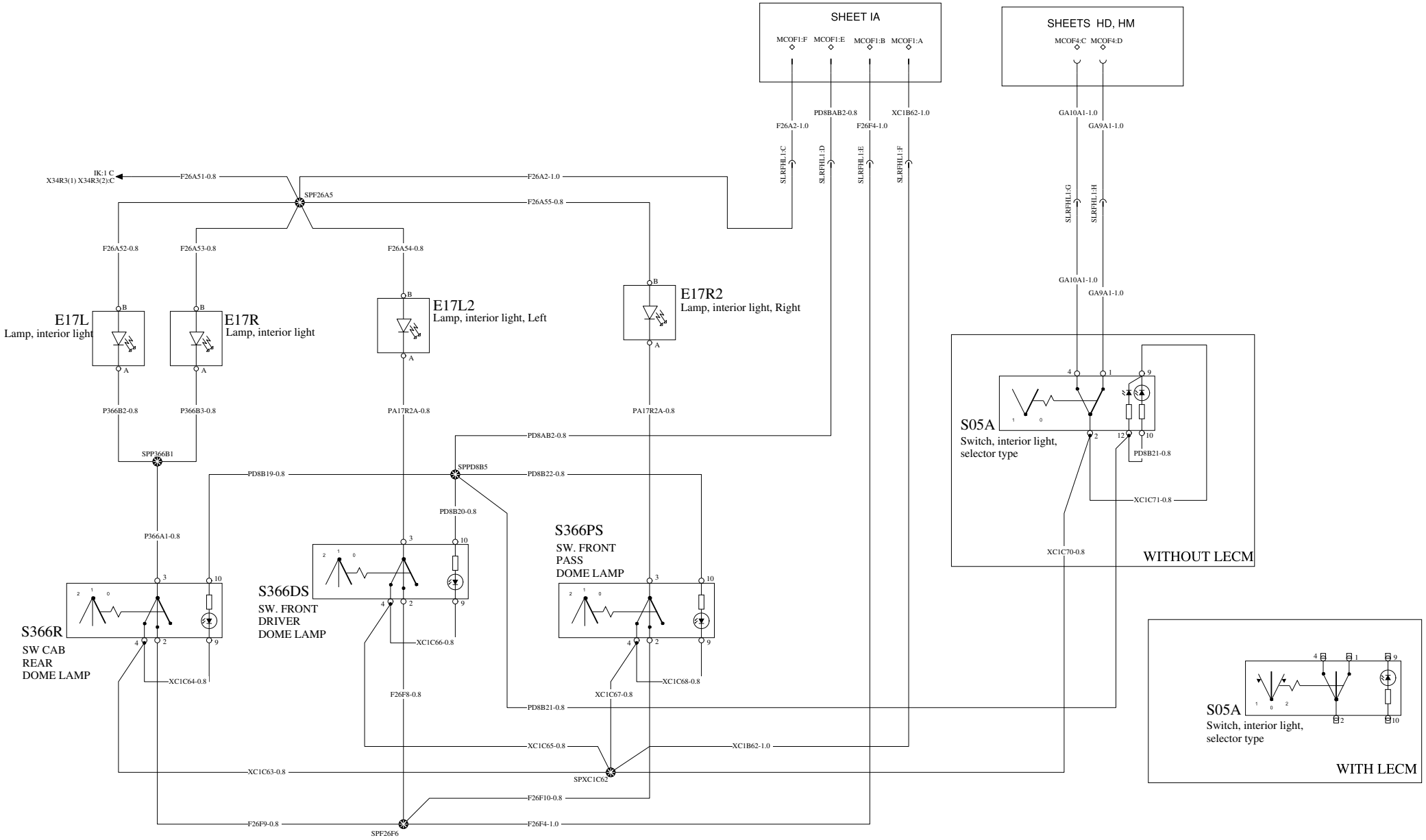

Volvo Truck Corporation	Document title WIRING DIAGRAM, 12V MACK CONVENTIONAL Document type PRODUCT SCHEMATIC	Document No 23970505	Issue 03	Volume 1 (1)	Page 75 (105)

COURTESY LIGHTS - 70" SLEEPER

WIRING DIAGRAM: ID

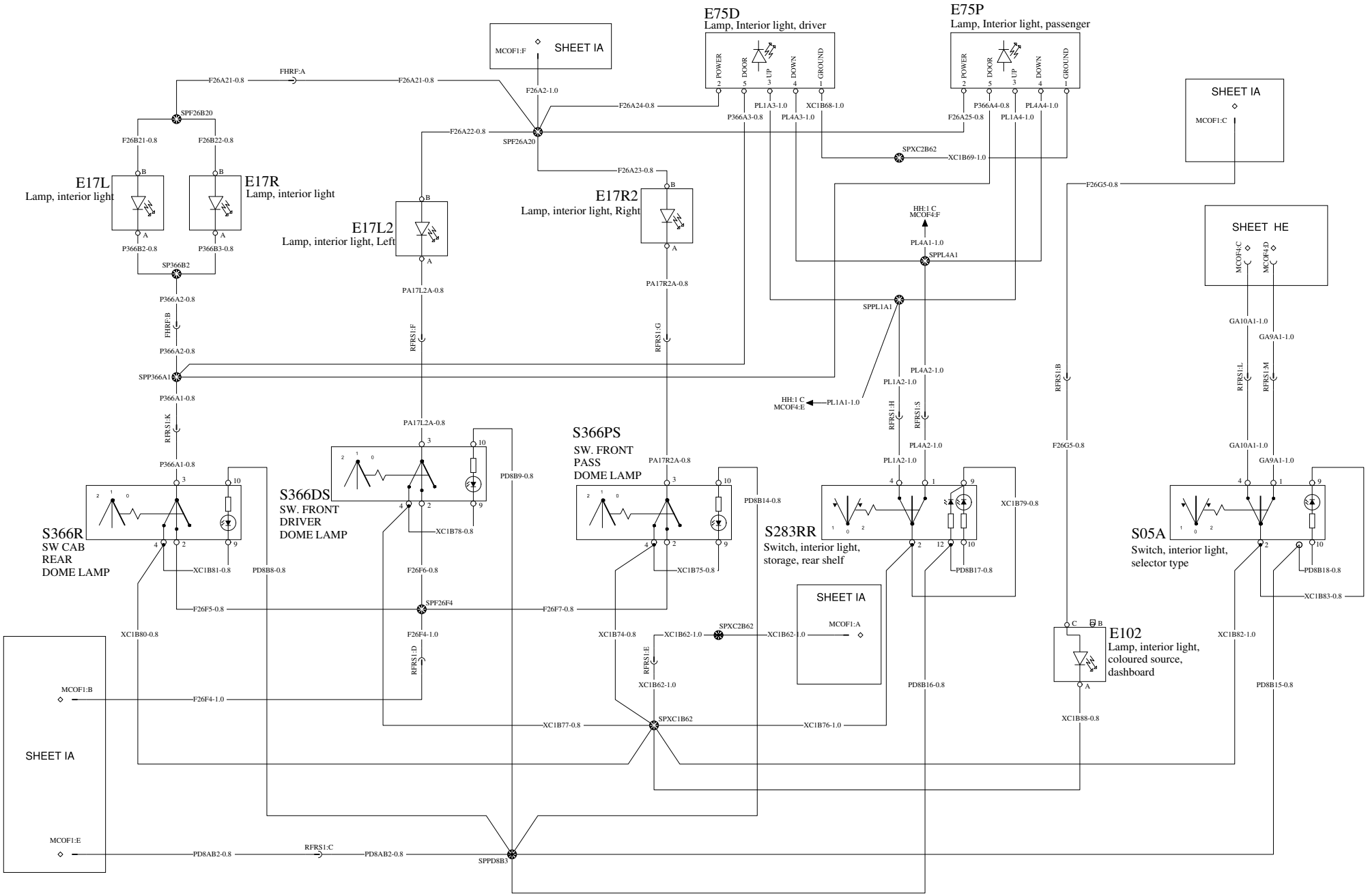

Volvo Truck Corporation	Document title WIRING DIAGRAM, 12V MACK CONVENTIONAL Document type PRODUCT SCHEMATIC	Document No 23970505	Issue 03	Volume 1 (1)	Page 76 (105)

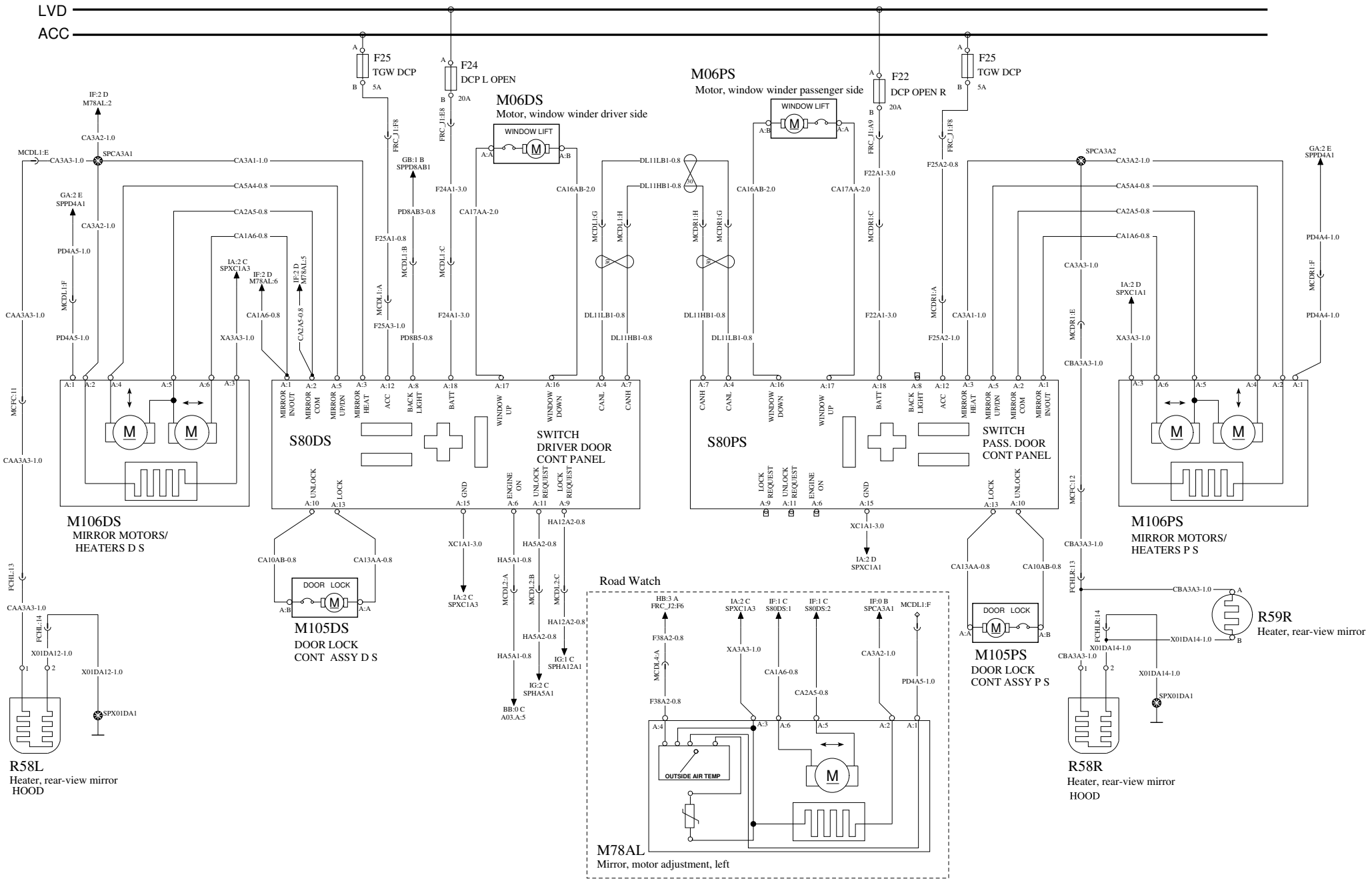

Volvo Truck Corporation	Document title WIRING DIAGRAM, 12V MACK CONVENTIONAL Document type PRODUCT SCHEMATIC	Document No 23970505	Issue 03	Volume 1 (1)	Page 77 (105)

REMOTE DOOR LOCKING

WIRING DIAGRAM: IG

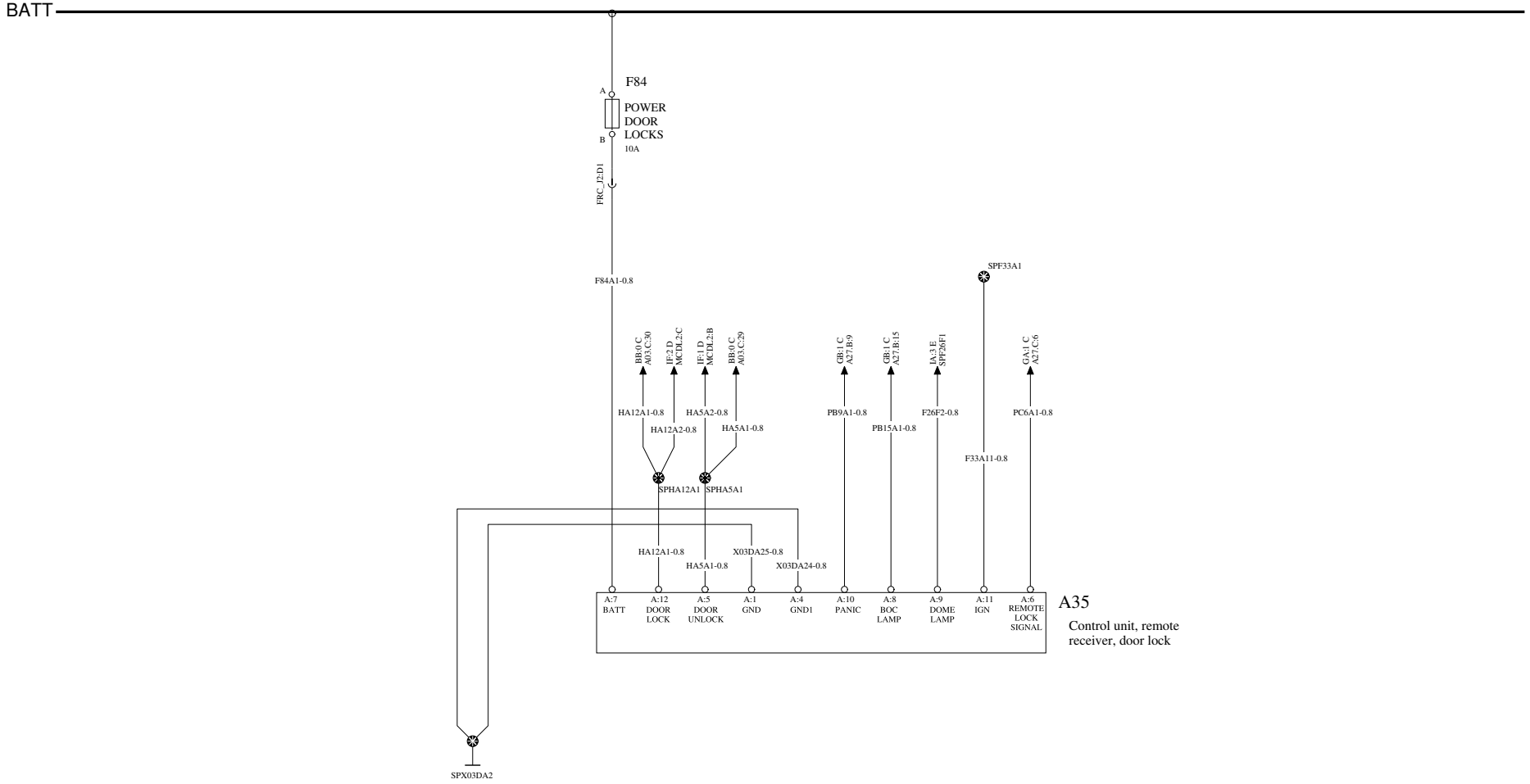

	Document title	Document No	Issue	Volume	Page
Volvo Truck Corporation	WIRING DIAGRAM, 12V MACK CONVENTIONAL	23970505	03	1 (1)	78 (105)
	Document type PRODUCT SCHEMATIC				

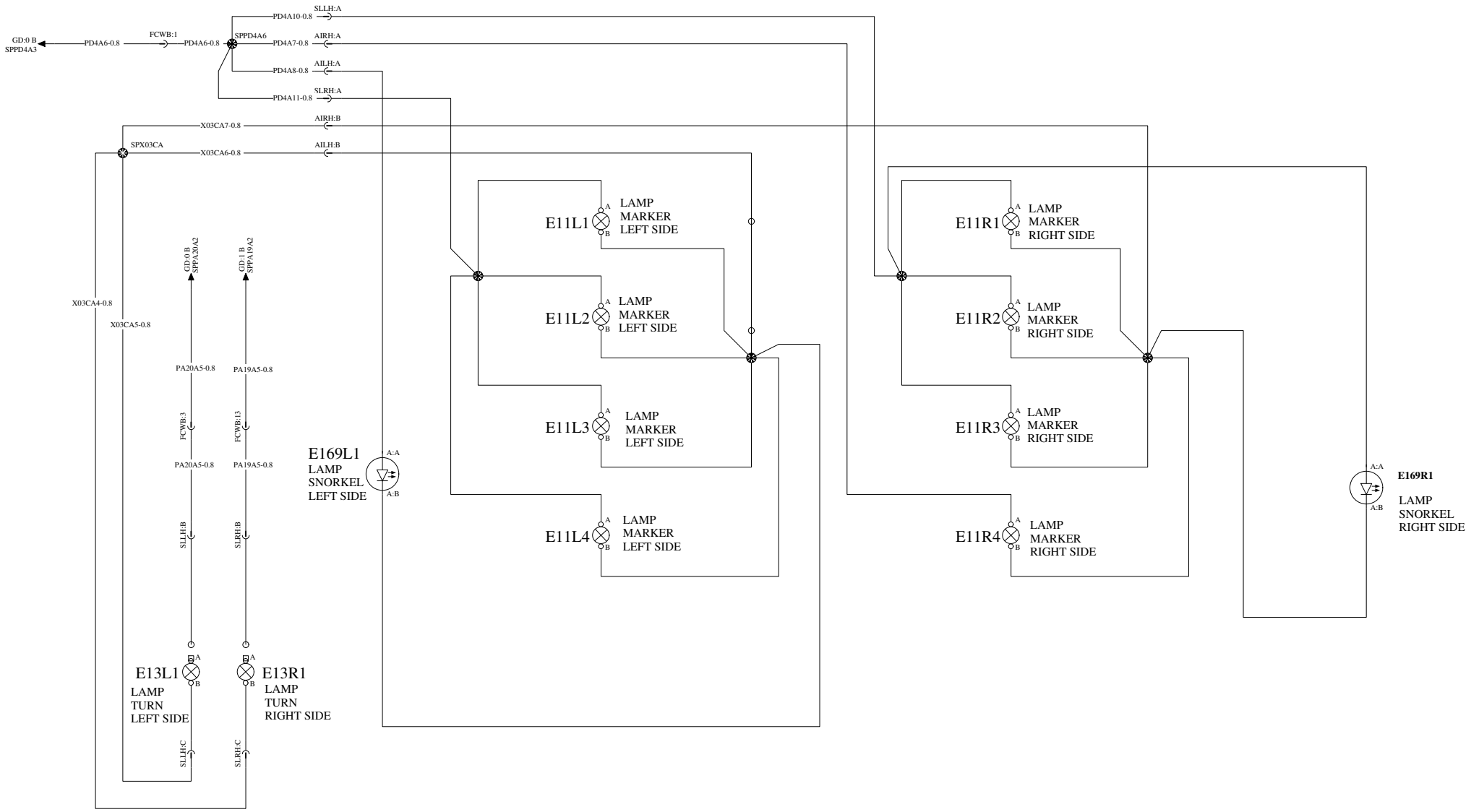

Volvo Truck Corporation	Document title WIRING DIAGRAM, 12V MACK CONVENTIONAL Document type PRODUCT SCHEMATIC	Document No 23970505	Issue 03	Volume 1 (1)	Page 79 (105)

HEATED SEATS/SEATBELT REMINDER/HEATED WINDSHIELD

WIRING DIAGRAM: IJ

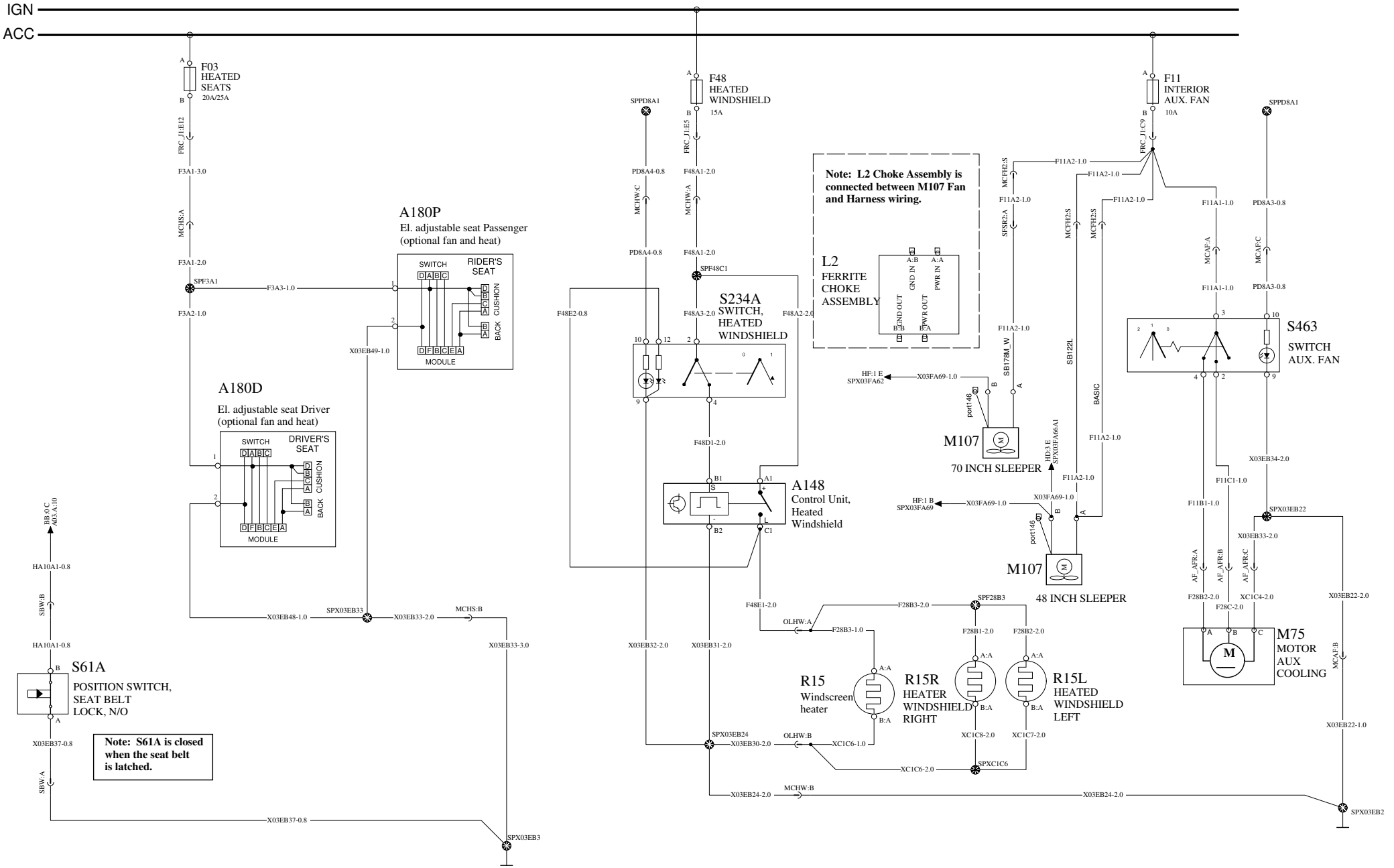

Volvo Truck Corporation	Document title WIRING DIAGRAM, 12V MACK CONVENTIONAL Document type PRODUCT SCHEMATIC	Document No 23970505	Issue 03	Volume 1 (1)	Page 80 (105)

CIGAR LIGHTER / AUX POWER

WIRING DIAGRAM: IK

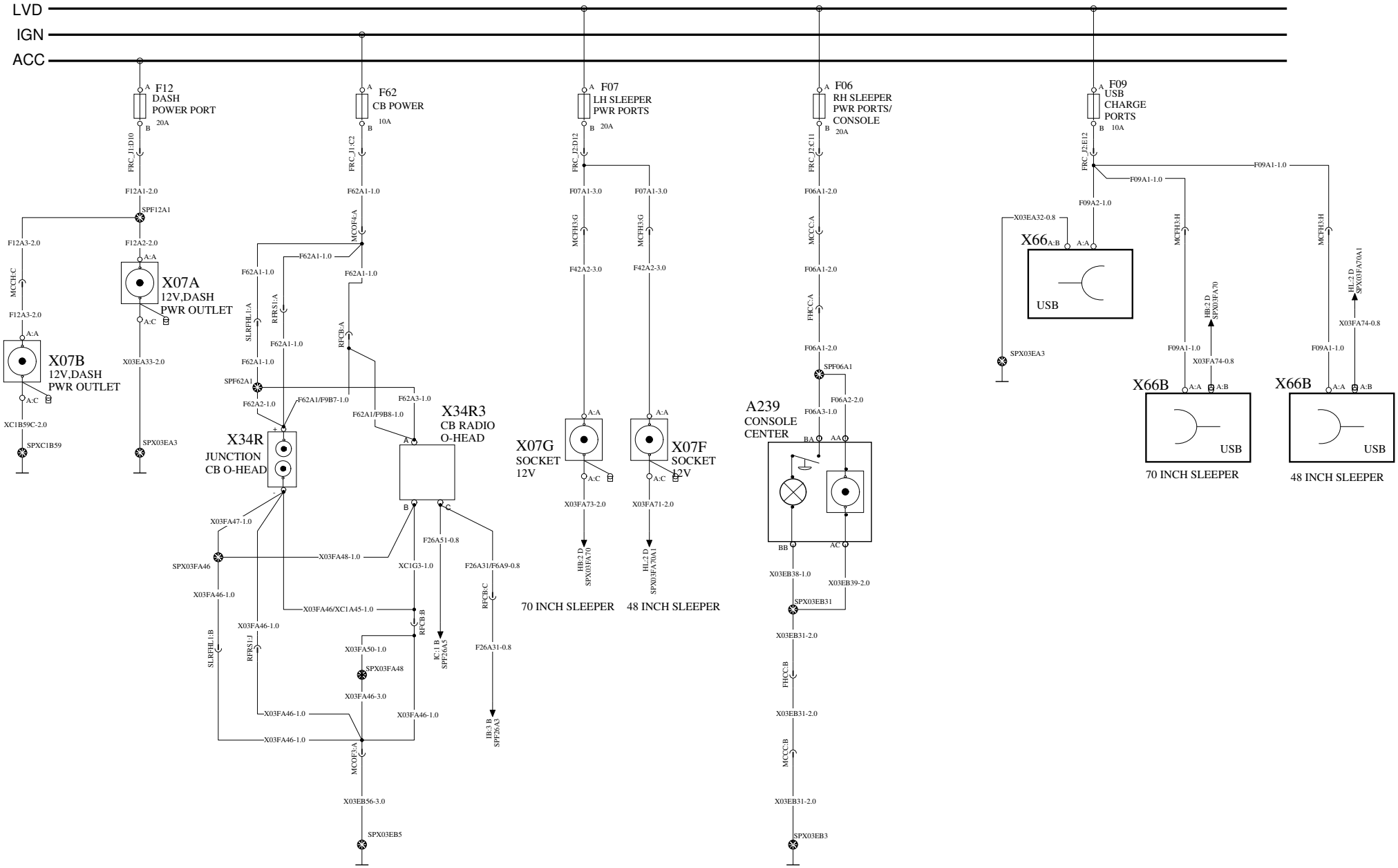

Volvo Truck Corporation	Document title WIRING DIAGRAM, 12V MACK CONVENTIONAL Document type PRODUCT SCHEMATIC	Document No 23970505	Issue 03	Volume 1 (1)	Page 81 (105)

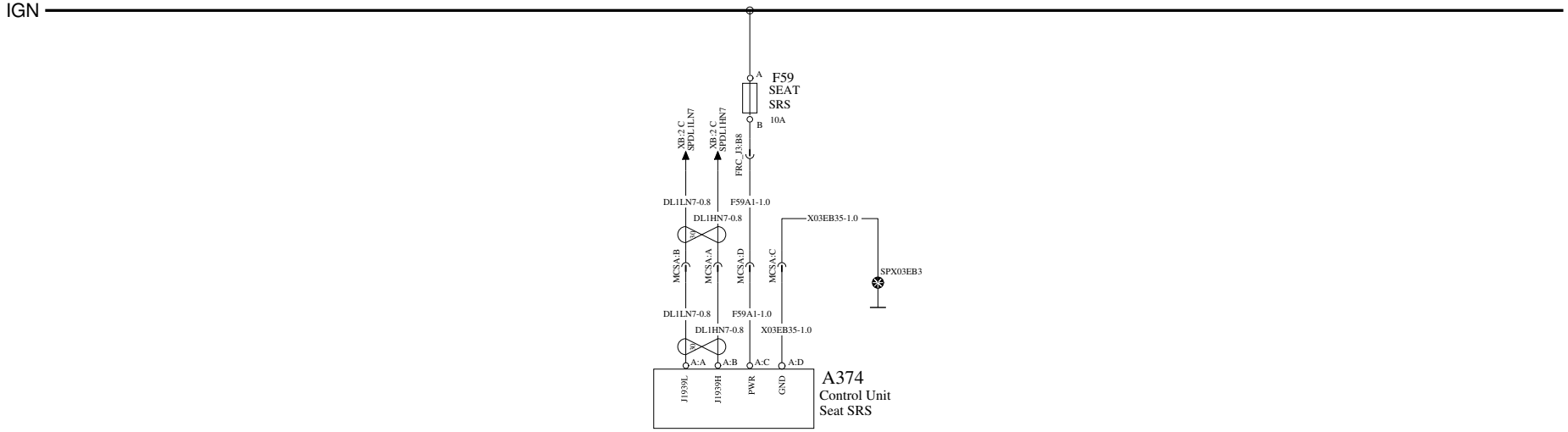
IGN
A
F59
SEAT
SRS
10A
B
XB:2 C
SPDL1LN7
XB:2 C
SPDL1HN7
FRC_J3:B8
DL1LN7-0.8
F59A1-1.0
DL1HN7-0.8
X03EB35-1.0
MCSA:B
MCSA:A
MCSA:D
MCSA:C
SPX03EB3
DL1LN7-0.8
F59A1-1.0
DL1HN7-0.8
X03EB35-1.0
A:A
A:B
A:C
A:D
J1939L
J1939H
PWR
GND
A374
Control Unit
Seat SRS

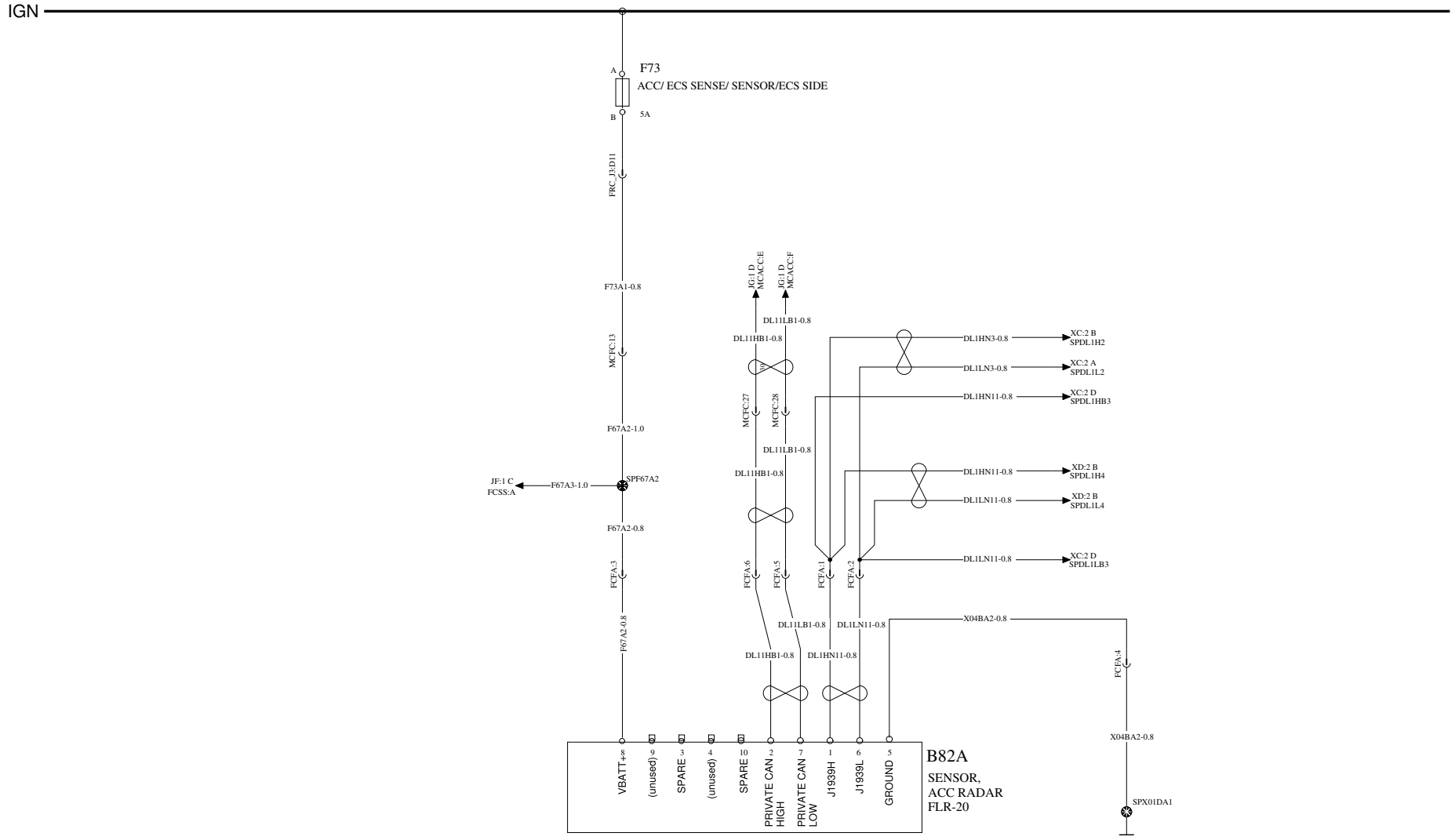

Volvo Truck Corporation	Document title WIRING DIAGRAM, 12V MACK CONVENTIONAL Document type PRODUCT SCHEMATIC	Document No 23970505	Issue 03	Volume 1 (1)	Page 83 (105)

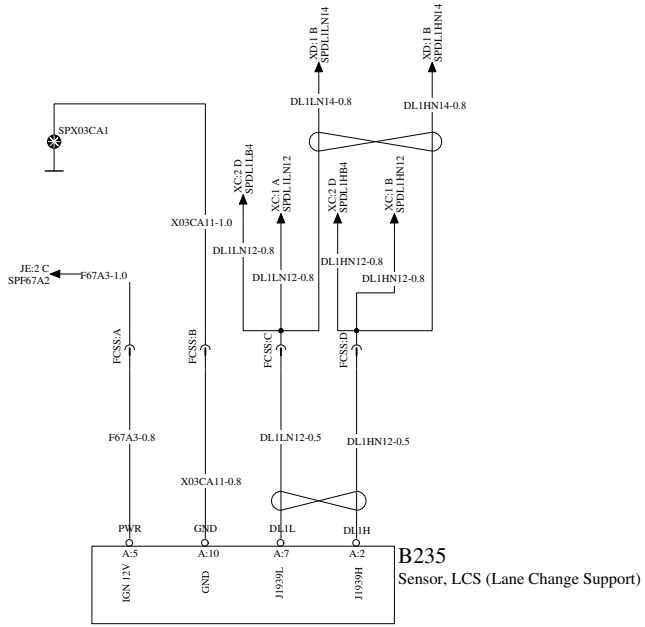

AERO/CLASSIC

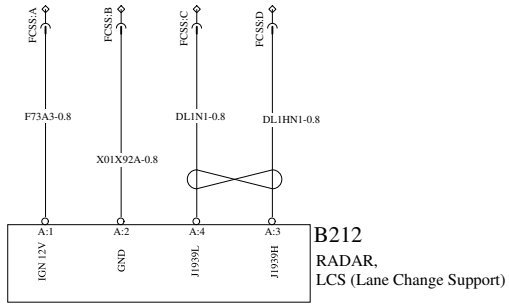

CONSTRUC

	Document title	Document No	Issue	Volume	Page
Volvo Truck Corporation	WIRING DIAGRAM, 12V MACK CONVENTIONAL Document type PRODUCT SCHEMATIC	23970505	03	1 (1)	84 (105)

LANE DEPARTURE WARNING -DAYCAB AND 48" SLEEPER

WIRING DIAGRAM: JG

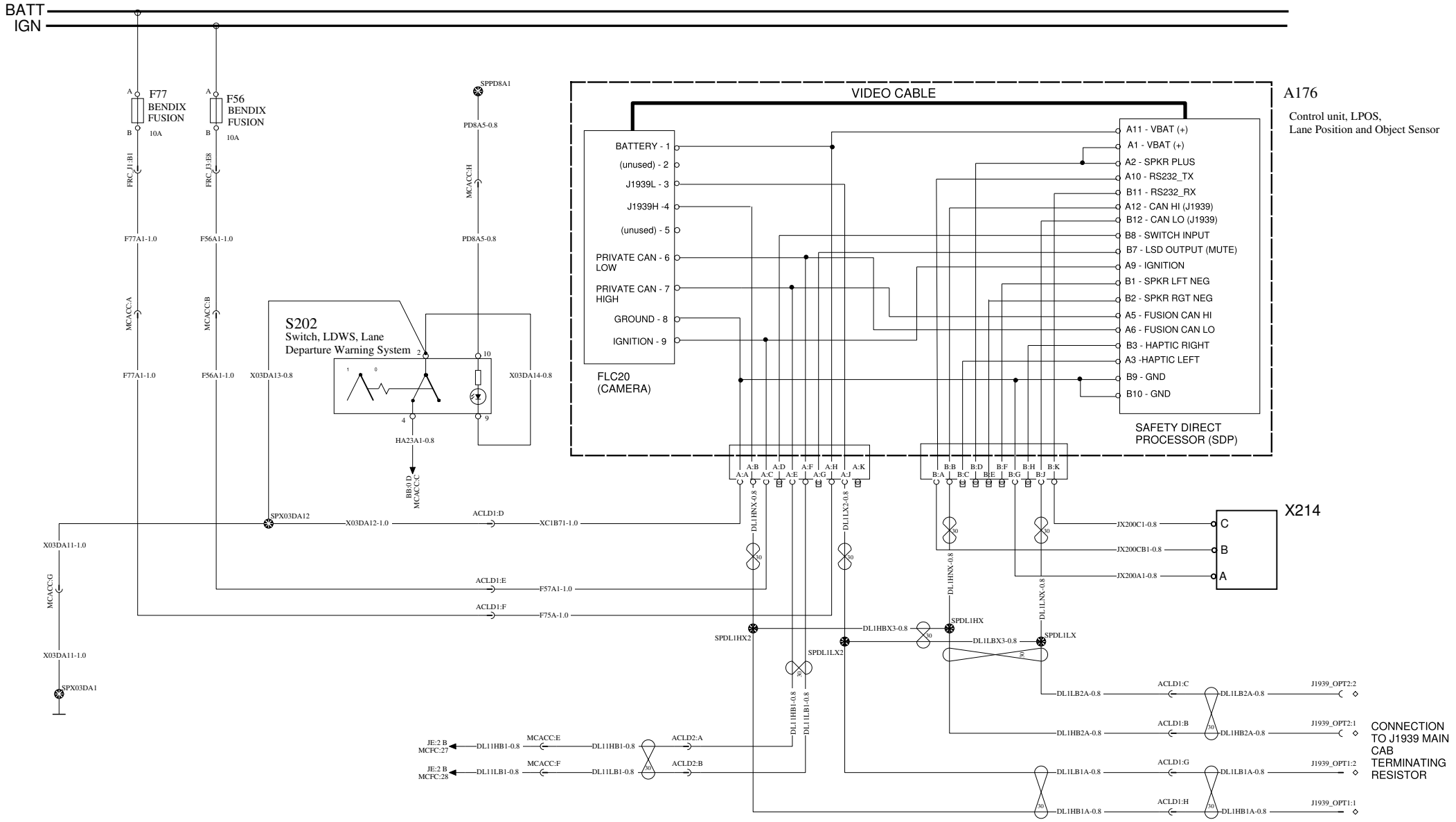

Volvo Truck Corporation	Document title WIRING DIAGRAM, 12V MACK CONVENTIONAL Document type PRODUCT SCHEMATIC	Document No 23970505	Issue 03	Volume 1 (1)	Page 85 (105)

LANE DEPARTURE WARNING - 70 " SLEEPER

WIRING DIAGRAM: JH

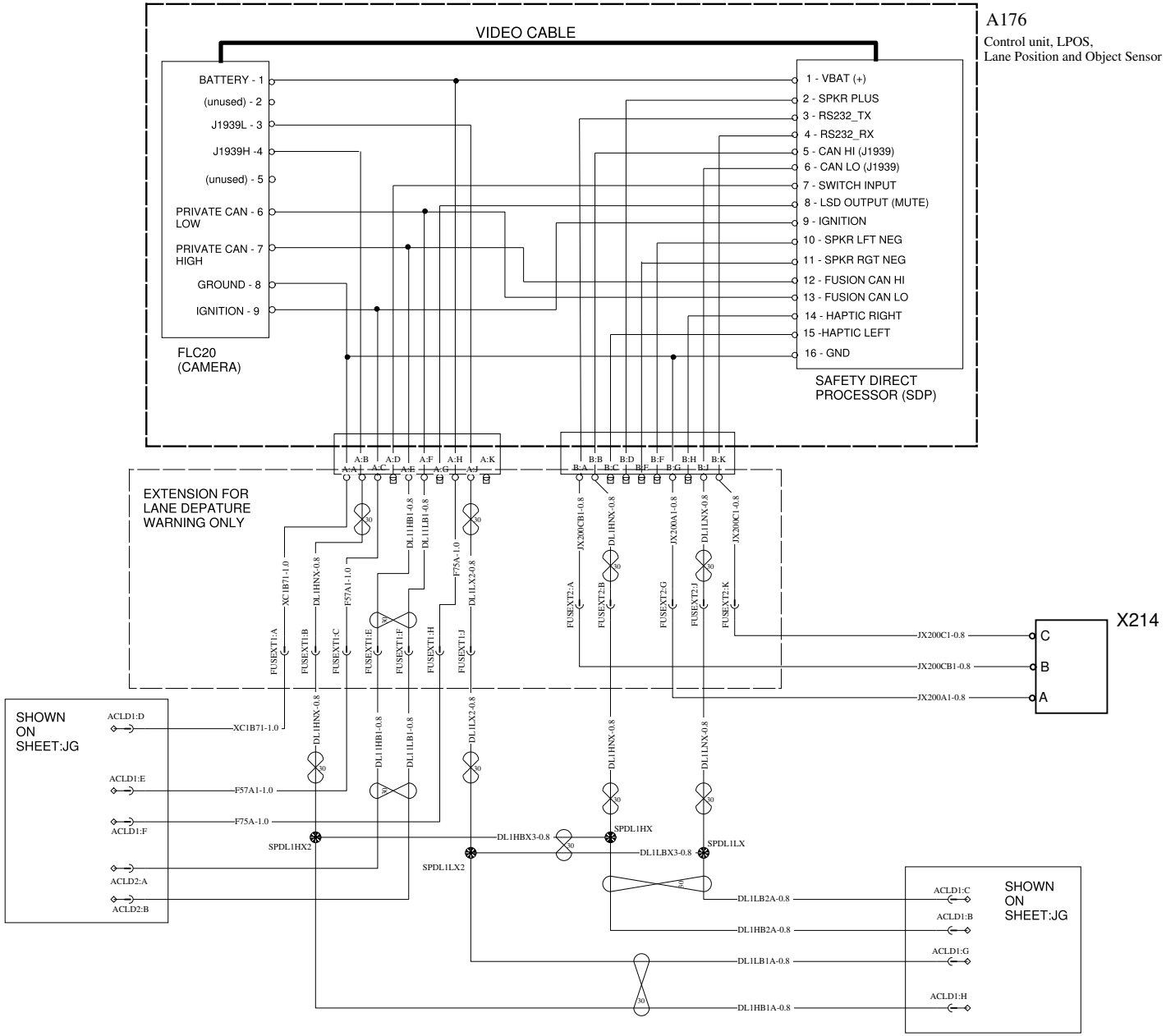

Volvo Truck Corporation	Document title WIRING DIAGRAM, 12V MACK CONVENTIONAL Document type PRODUCT SCHEMATIC	Document No 23970505	Issue 03	Volume 1 (1)	Page 86 (105)

AUDIO SYSTEM - DAYCAB

WIRING DIAGRAM: KA

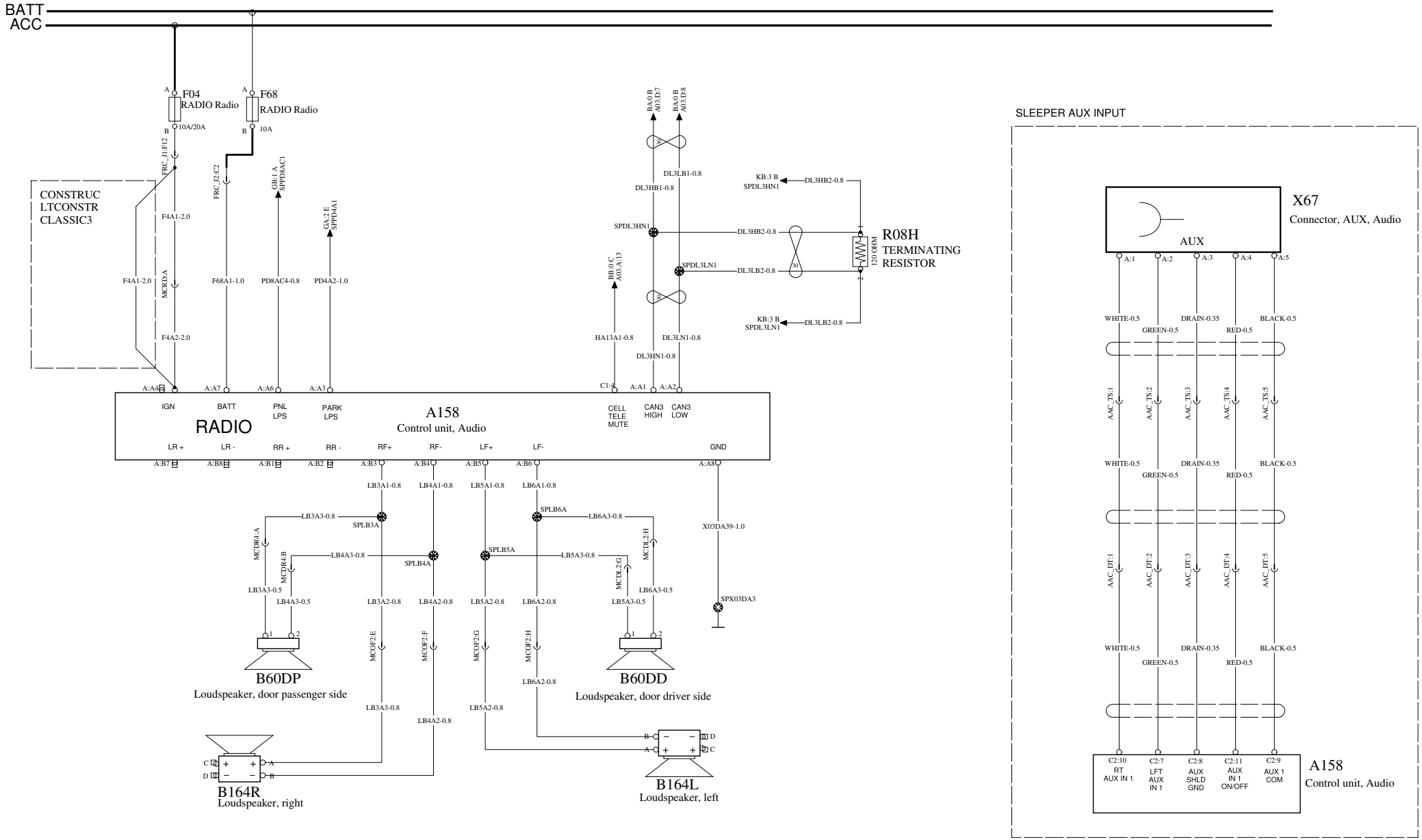

	Document title	Document No	Issue	Volume	Page
Volvo Truck Corporation	WIRING DIAGRAM, 12V MACK CONVENTIONAL Document type PRODUCT SCHEMATIC	23970505	03	1 (1)	87 (105)

AUDIO SYSTEM - SLEEPERS

WIRING DIAGRAM: KB

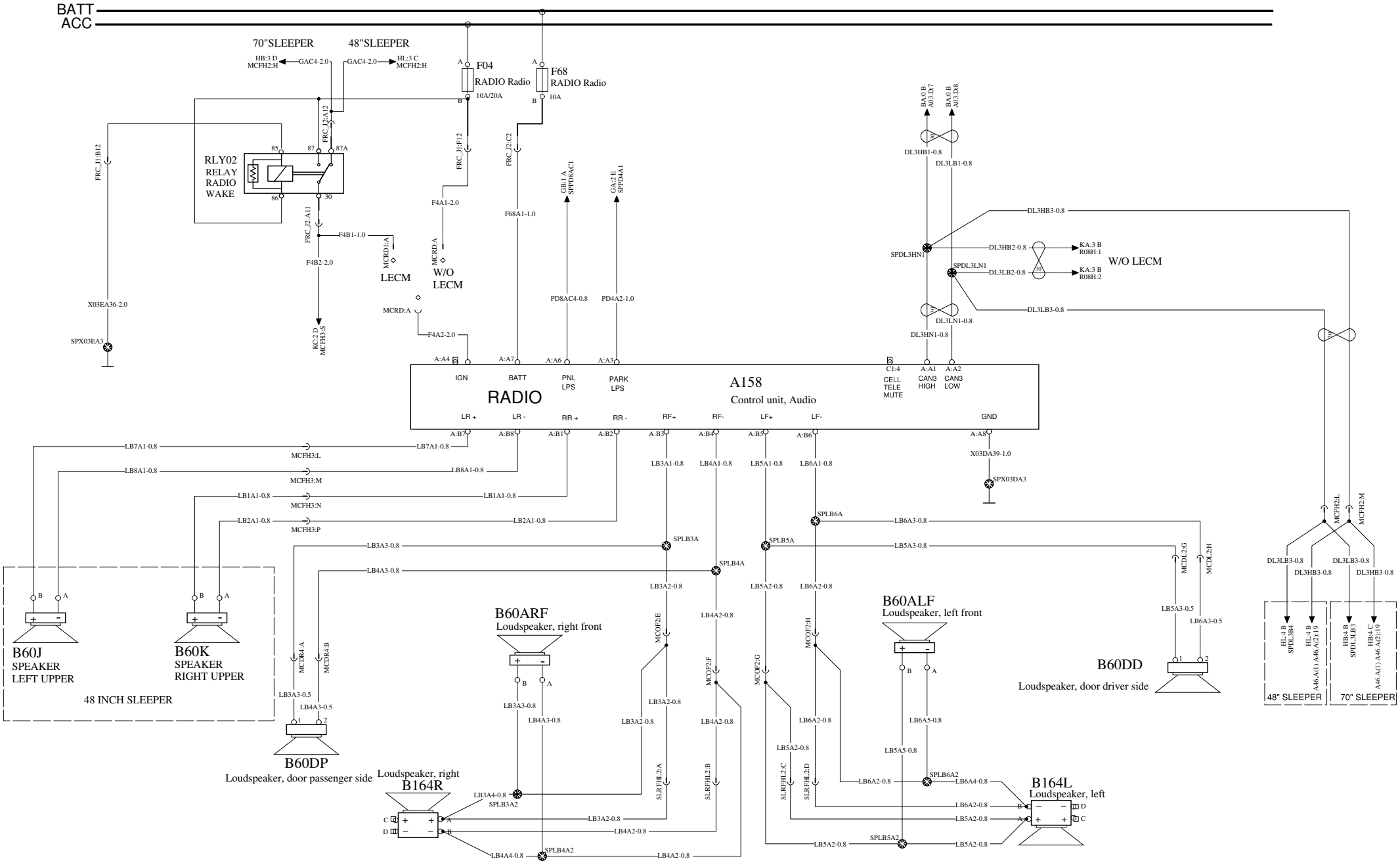

	Document title	Document No	Issue	Volume	Page
Volvo Truck Corporation	WIRING DIAGRAM, 12V MACK CONVENTIONAL Document type PRODUCT SCHEMATIC	23970505	03	1 (1)	88 (105)

AUDIO SYSTEM SPEAKER OUTPUTS W/ AMPLIFIER

WIRING DIAGRAM: KC

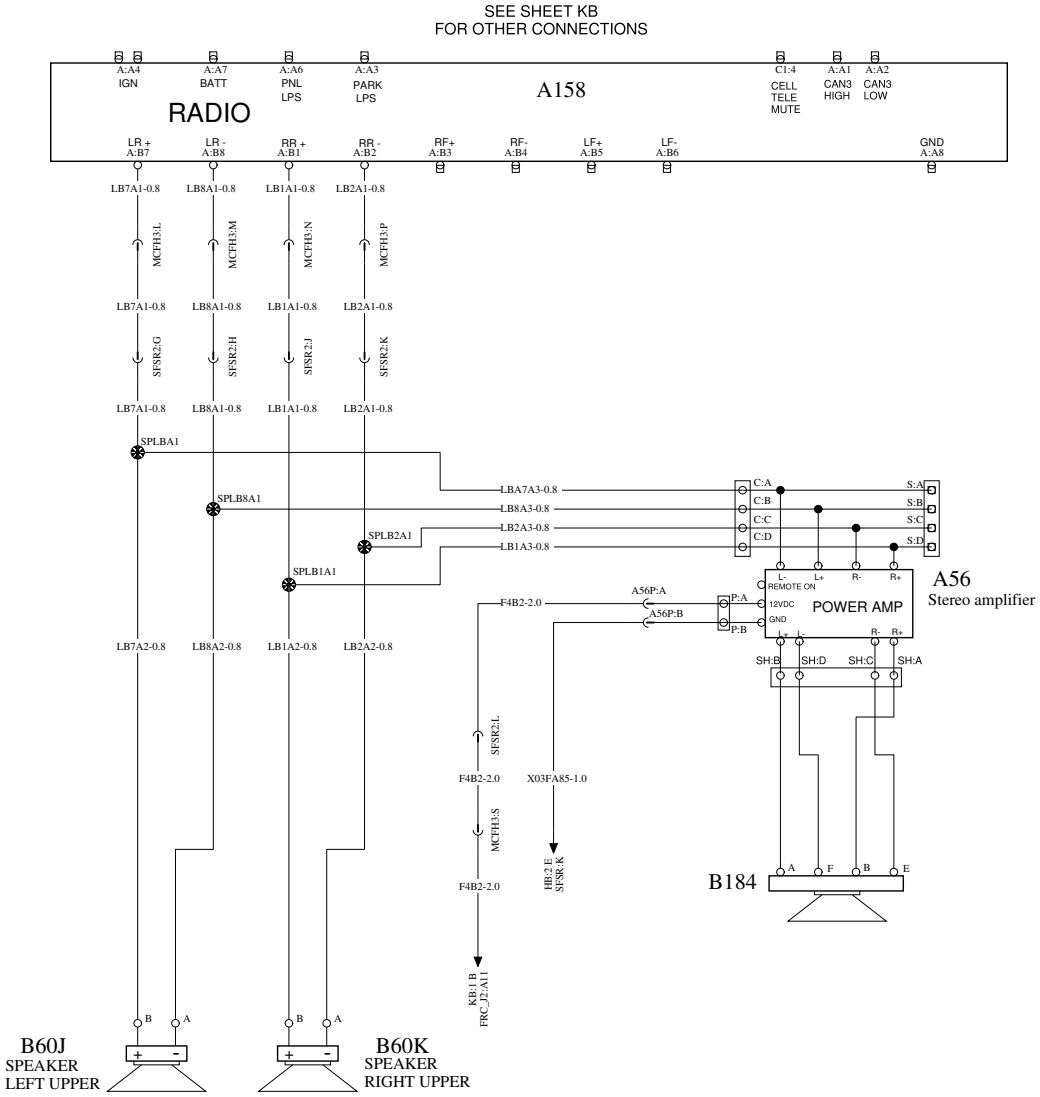

	Document title	Document No	Issue	Volume	Page
Volvo Truck Corporation	WIRING DIAGRAM, 12V MACK CONVENTIONAL Document type PRODUCT SCHEMATIC	23970505	03	1 (1)	89 (105)

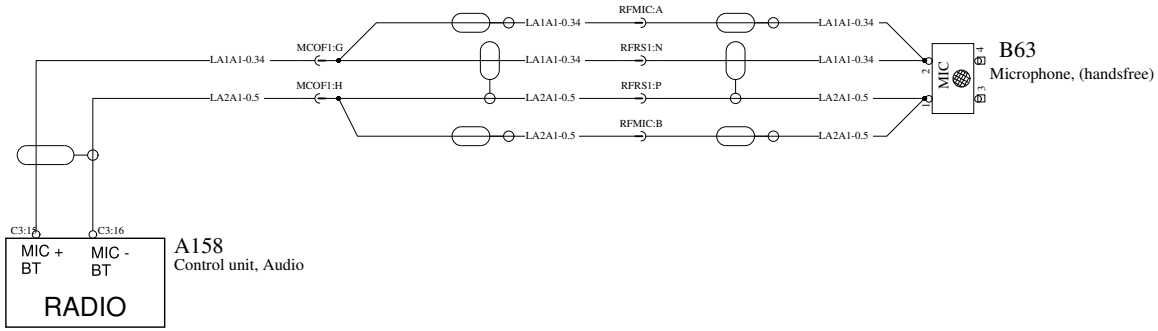
LA1A1-0.34
MCOF1:G
LA1A1-0.34
RFMIC:A
LA1A1-0.34
LA1A1-0.34
RFRS1:N
LA1A1-0.34
LA2A1-0.5
MCOF1:H
LA2A1-0.5
RFRS1:P
LA2A1-0.5
LA2A1-0.5
RFMIC:B
LA2A1-0.5
MIC
B63
Microphone, (handsfree)
C3:15
C3:16
MIC + BT
MIC - BT
RADIO
A158
Control unit, Audio

INFOTAINMENT AUDIO SYSTEM 1/2

WIRING DIAGRAM: KL

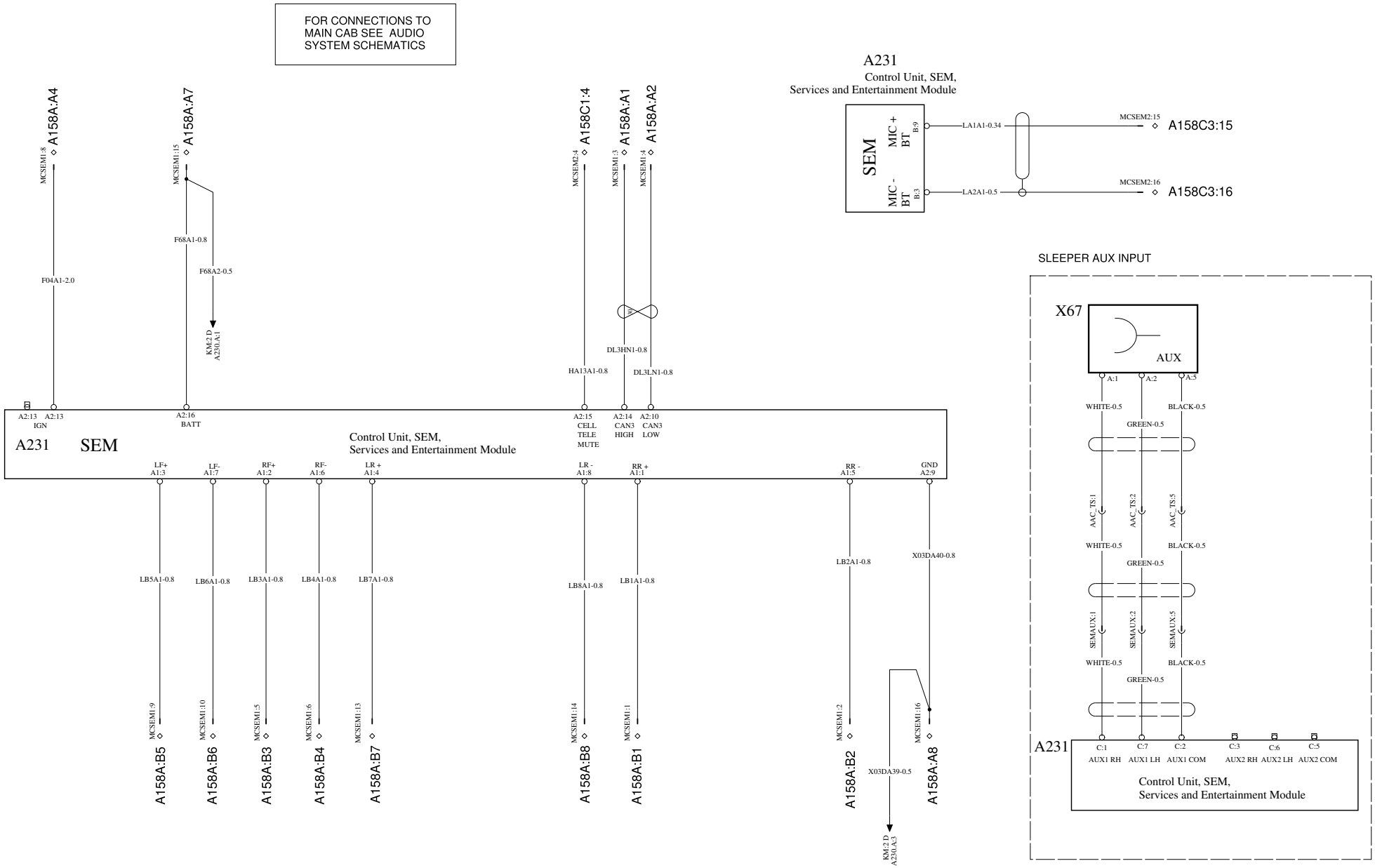

Volvo Truck Corporation	Document title: WIRING DIAGRAM, 12V MACK CONVENTIONAL Document type: PRODUCT SCHEMATIC	Document No: 23970505	Issue: 03	Volume: 1 (1)	Page: 91 (105)

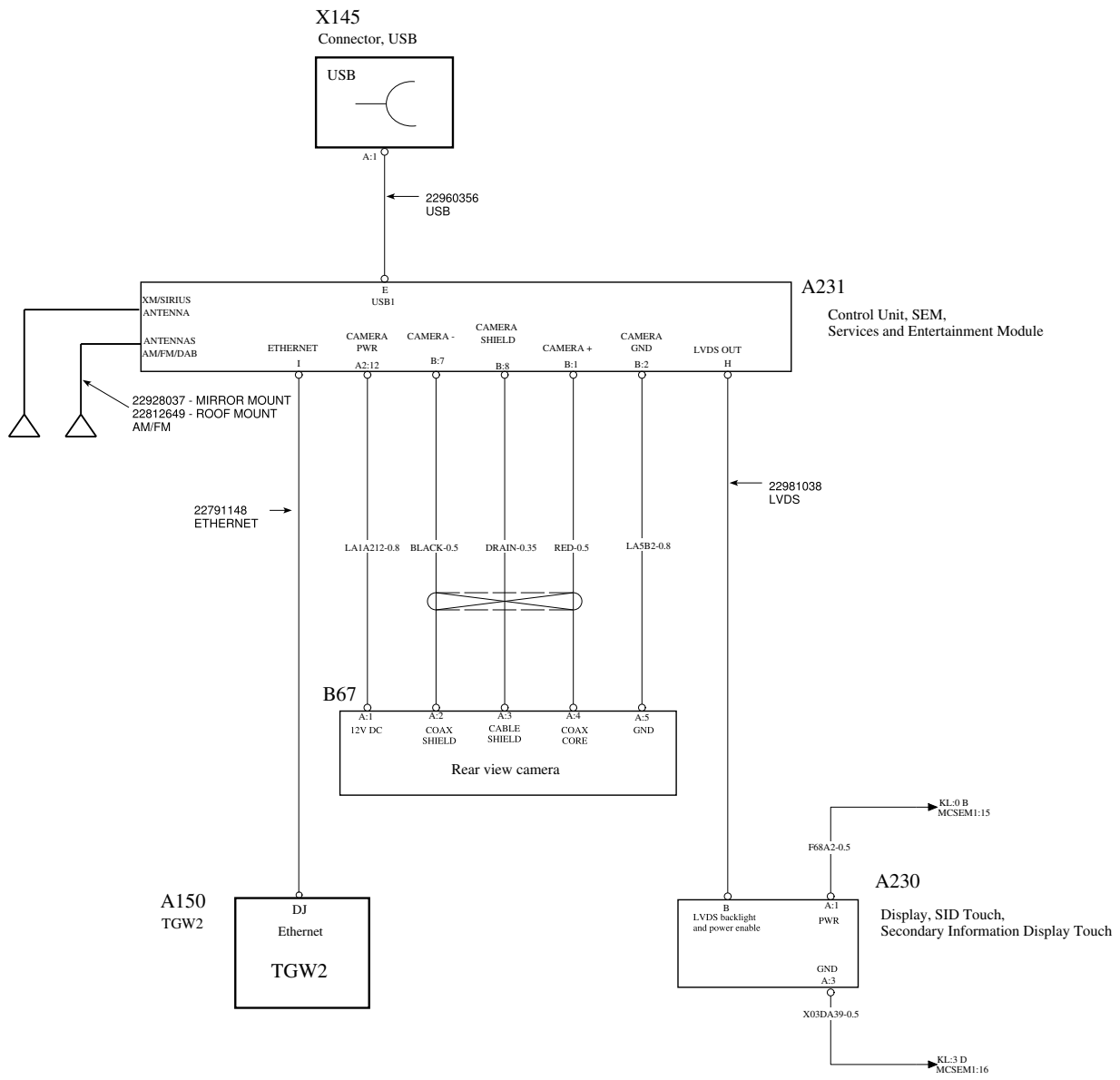

Volvo Truck Corporation	Document title WIRING DIAGRAM, 12V MACK CONVENTIONAL Document type PRODUCT SCHEMATIC	Document No 23970505	Issue 03	Volume 1 (1)	Page 92 (105)

TRAILER CABLE

WIRING DIAGRAM: MA

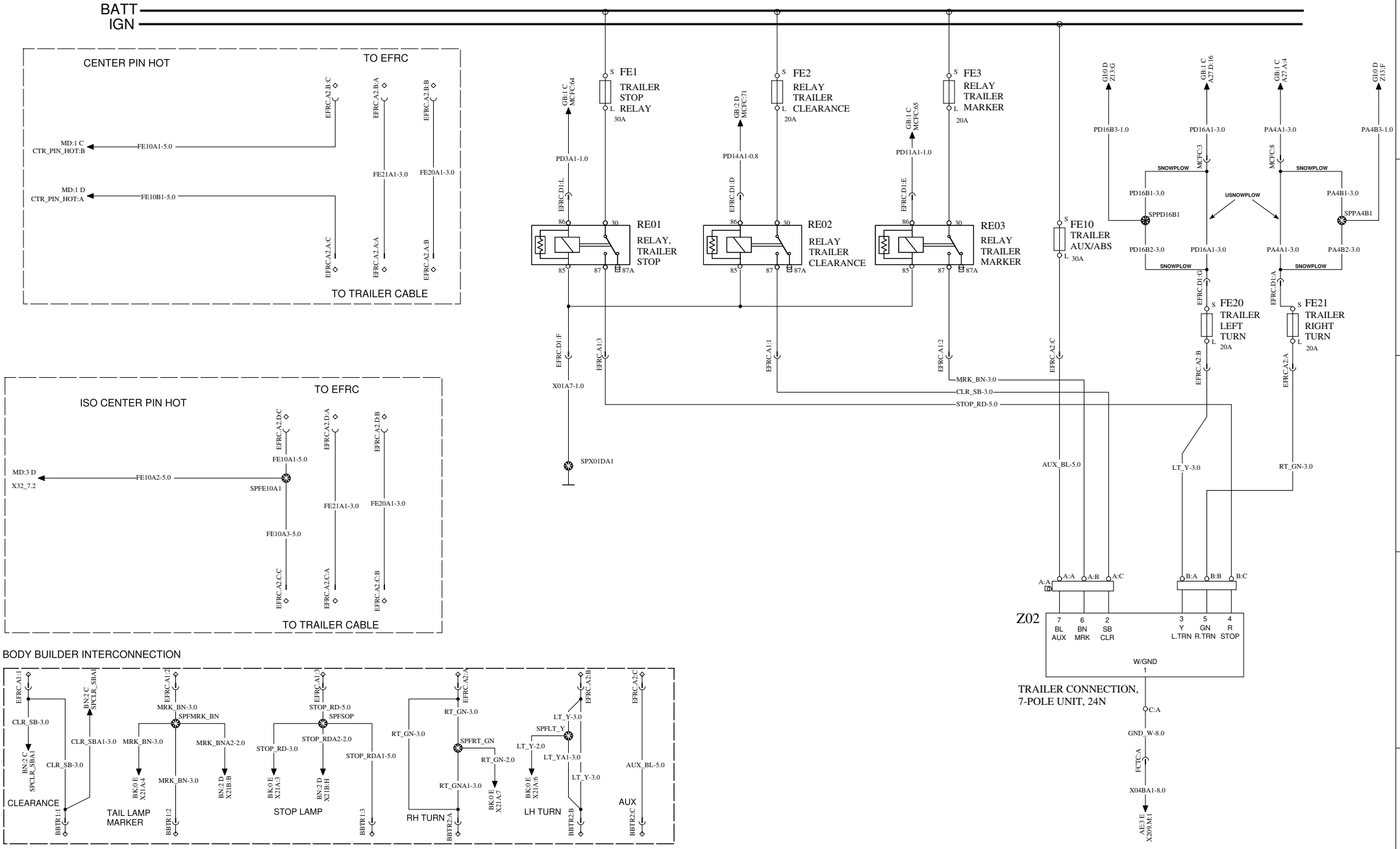

	Document title	Document No	Issue	Volume	Page
Volvo Truck Corporation	WIRING DIAGRAM, 12V MACK CONVENTIONAL Document type PRODUCT SCHEMATIC	23970505	03	1 (1)	93 (105)

TRAILER CABLE OPTIONS

WIRING DIAGRAM: MB

TRAILER CABLE EXTENSION CABLE

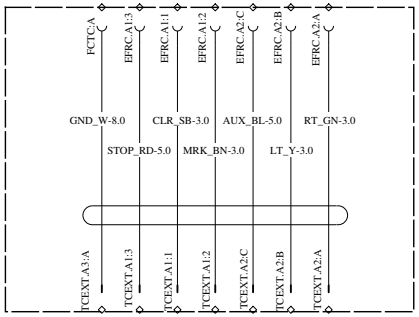

TRAILER CABLE EOF RECEPTACLE

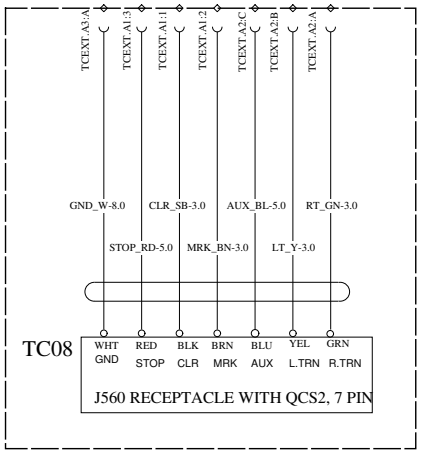

DETACHABLE TRAILER CABLES
STRAIGHT / COILED

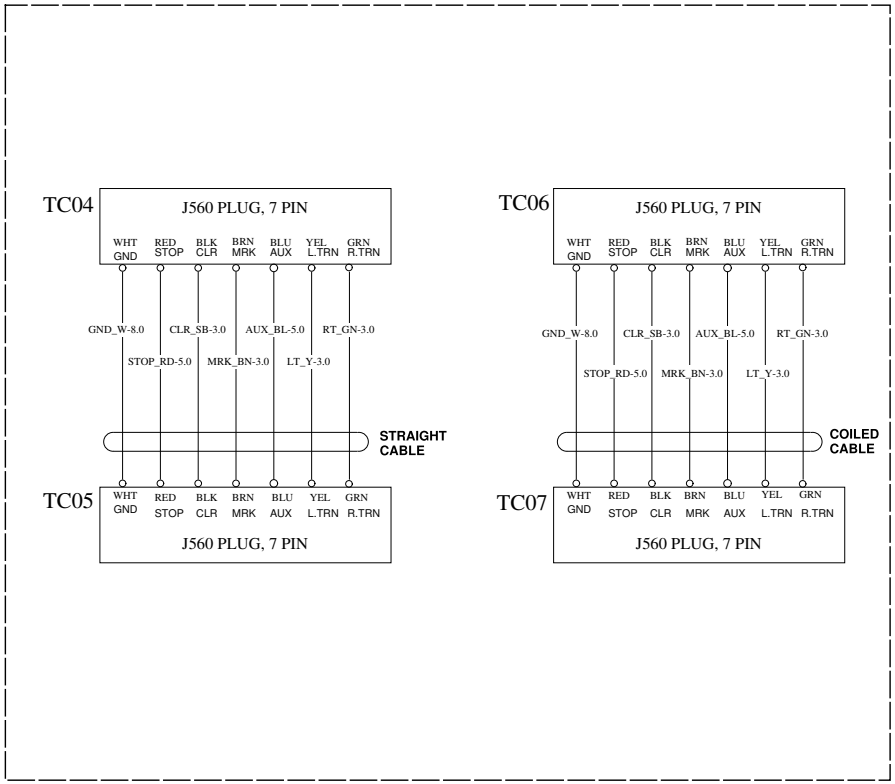

	Document title	Document No	Issue	Volume	Page
Volvo Truck Corporation	WIRING DIAGRAM, 12V MACK CONVENTIONAL Document type PRODUCT SCHEMATIC	23970505	03	1 (1)	94 (105)

TRAILER CABLE BODY BUILDER
"Y" END OPTION

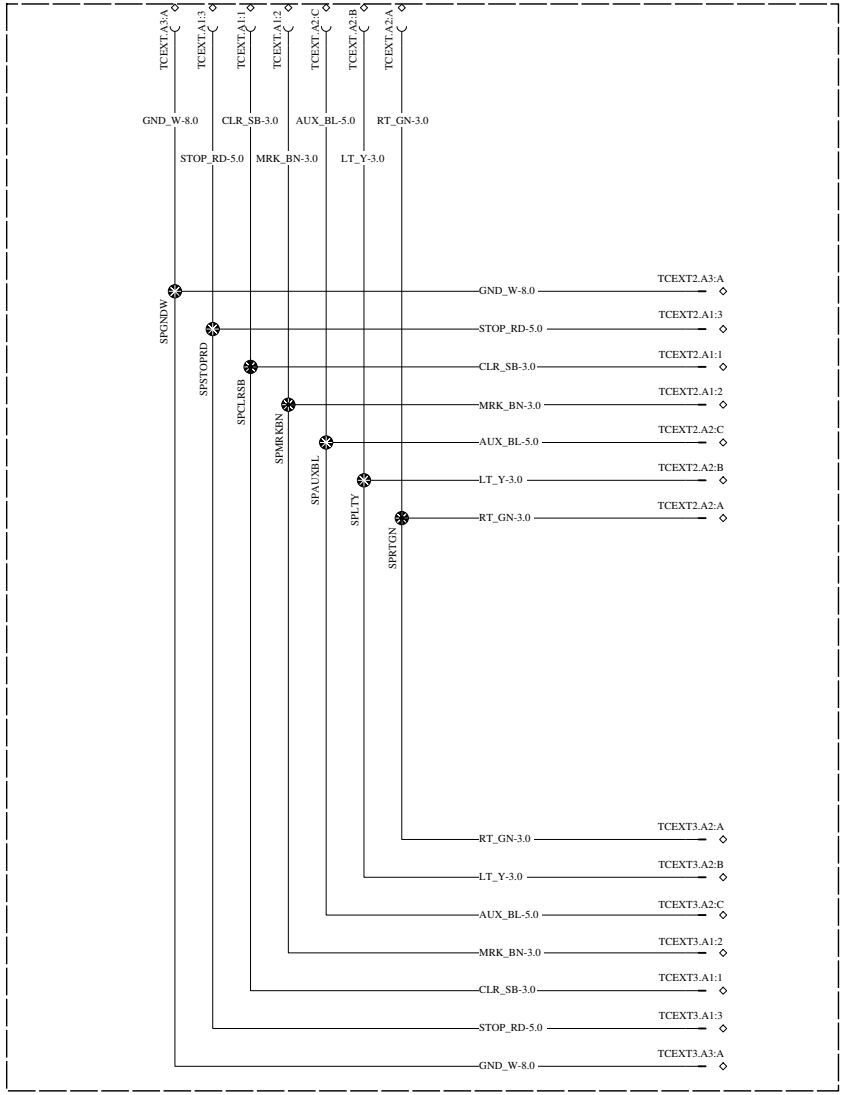

CENTER PIN HOT

WIRING DIAGRAM: MD

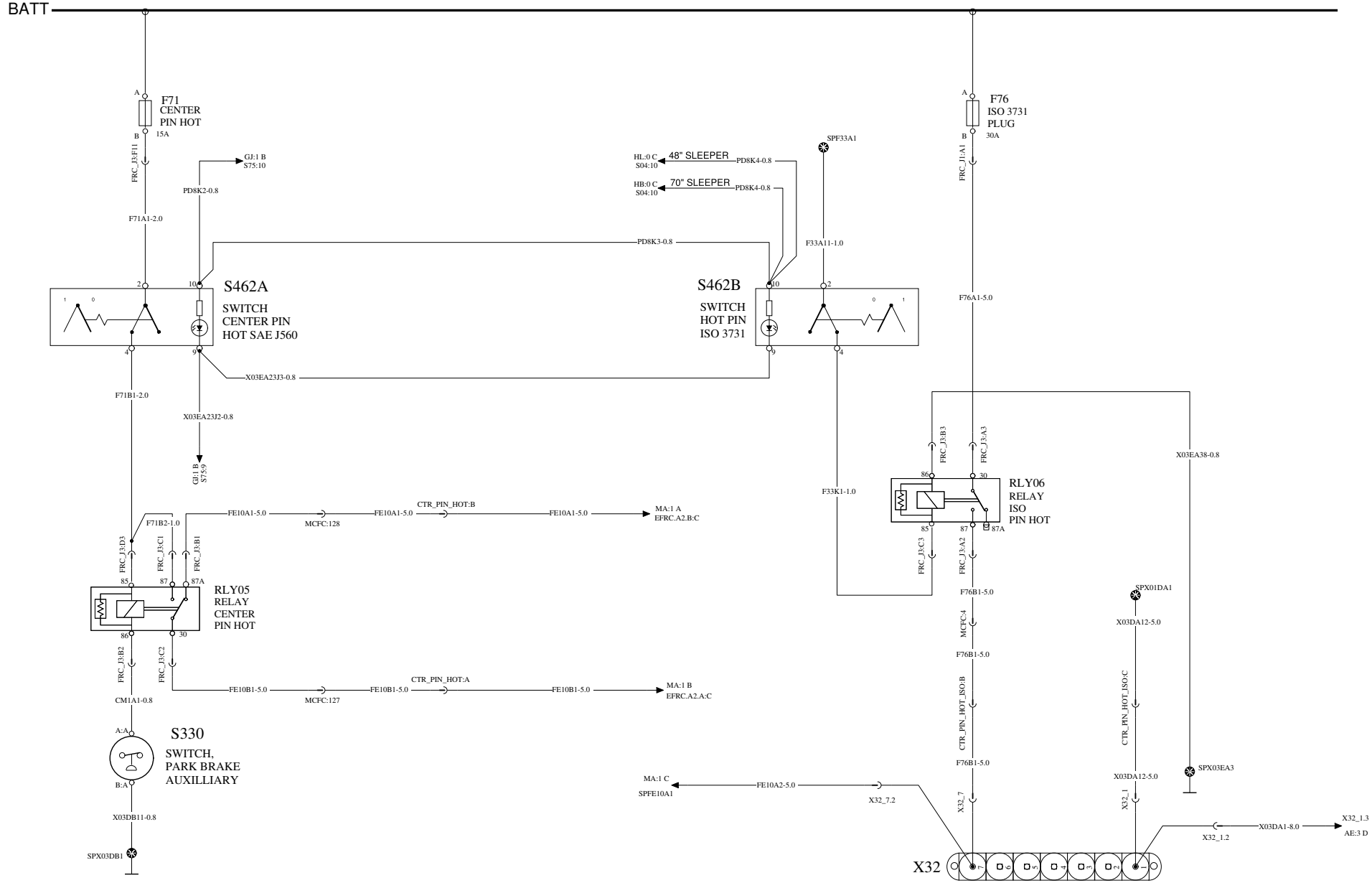

	Document title	Document No	Issue	Volume	Page
Volvo Truck Corporation	WIRING DIAGRAM, 12V MACK CONVENTIONAL Document type PRODUCT SCHEMATIC	23970505	03	1 (1)	96 (105)

SPARE SWITCHES AND AUXSW-6 OPTION

WIRING DIAGRAM: NA

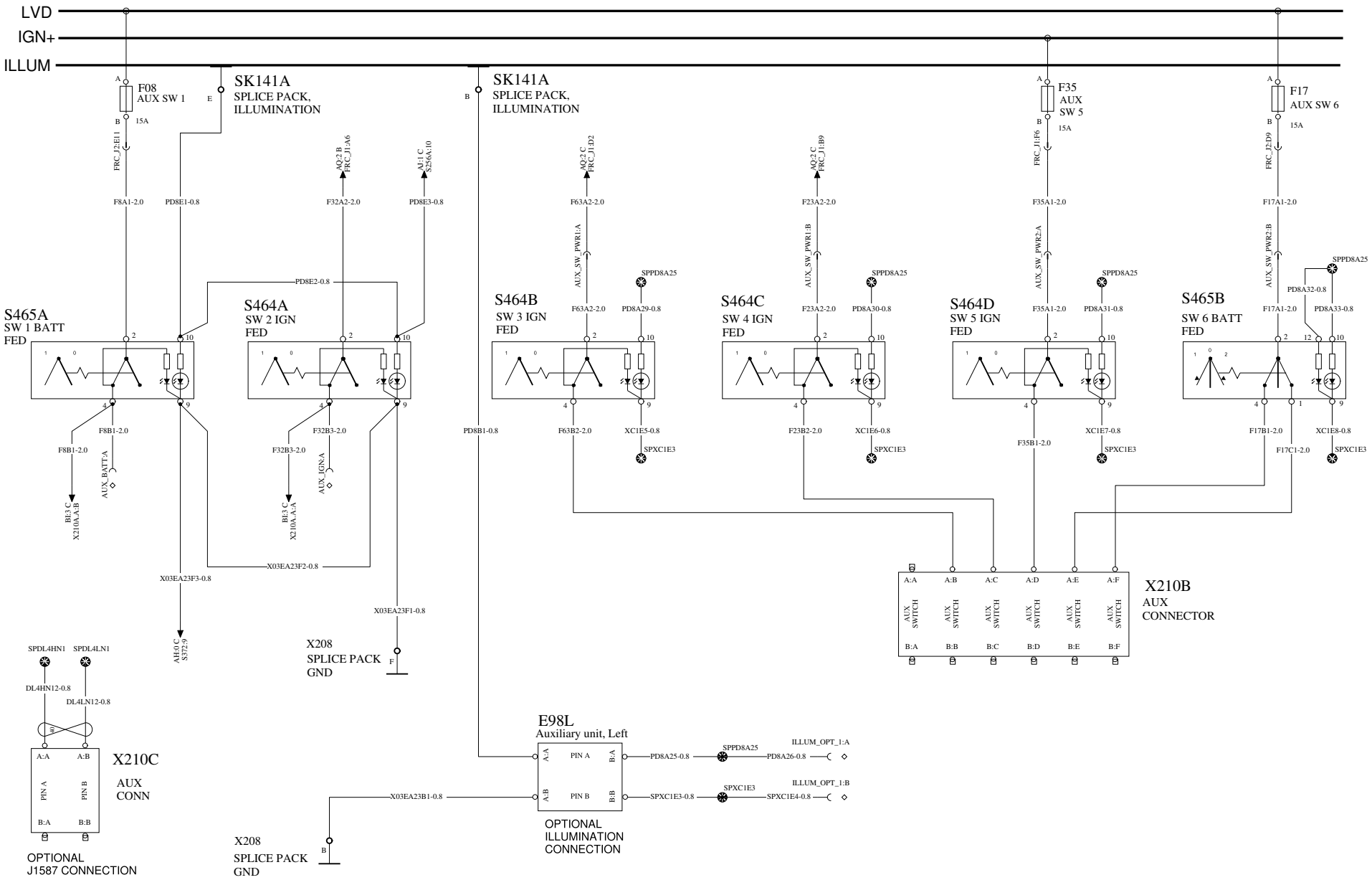

Volvo Truck Corporation	Document title WIRING DIAGRAM, 12V MACK CONVENTIONAL Document type PRODUCT SCHEMATIC	Document No 23970505	Issue 03	Volume 1 (1)	Page 97 (105)

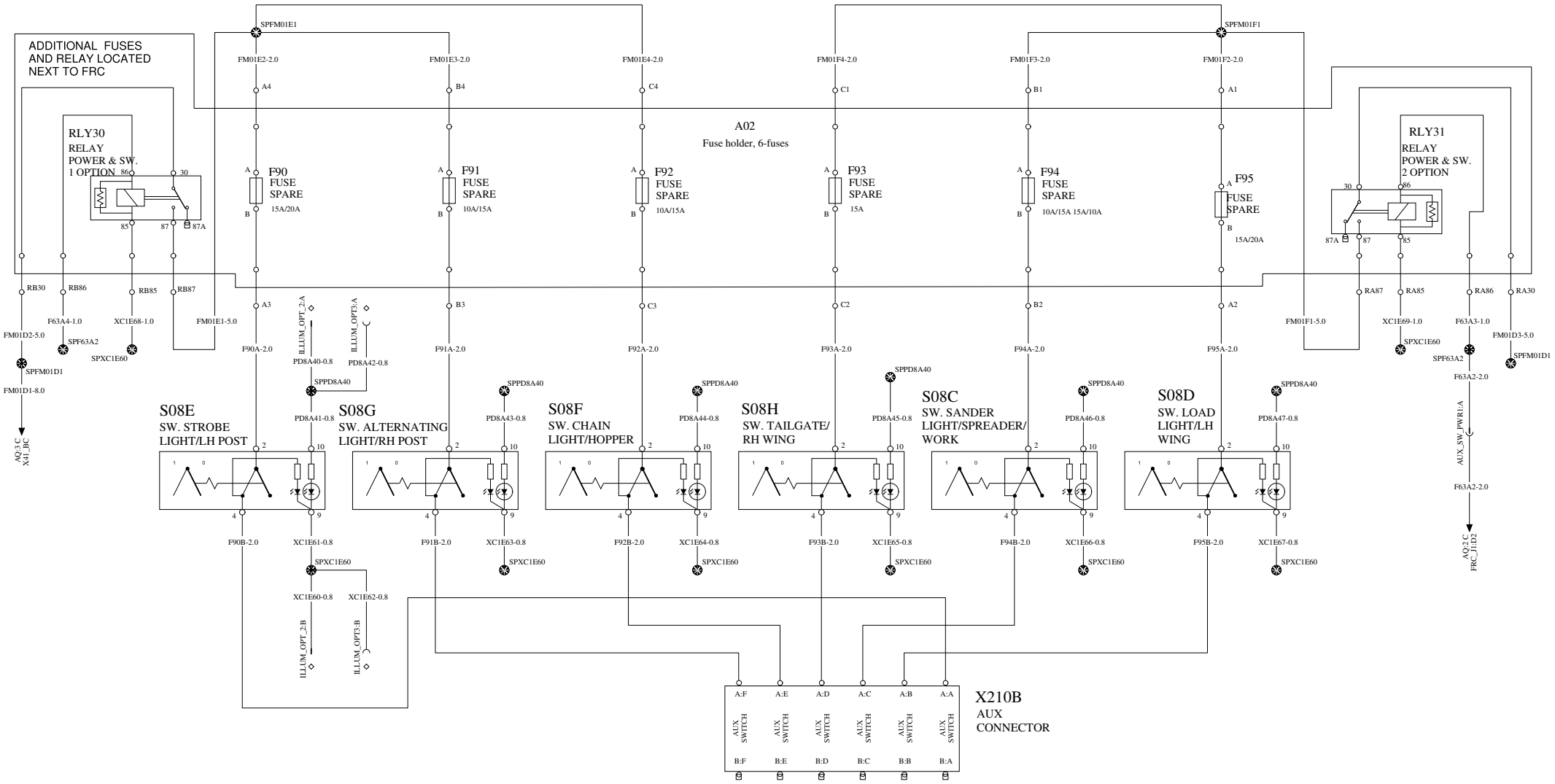

Volvo Truck Corporation	Document title WIRING DIAGRAM, 12V MACK CONVENTIONAL Document type PRODUCT SCHEMATIC	Document No 23970505	Issue 03	Volume 1 (1)	Page 98 (105)

SPARE SWITCHES - BBM-PK16

WIRING DIAGRAM: NC

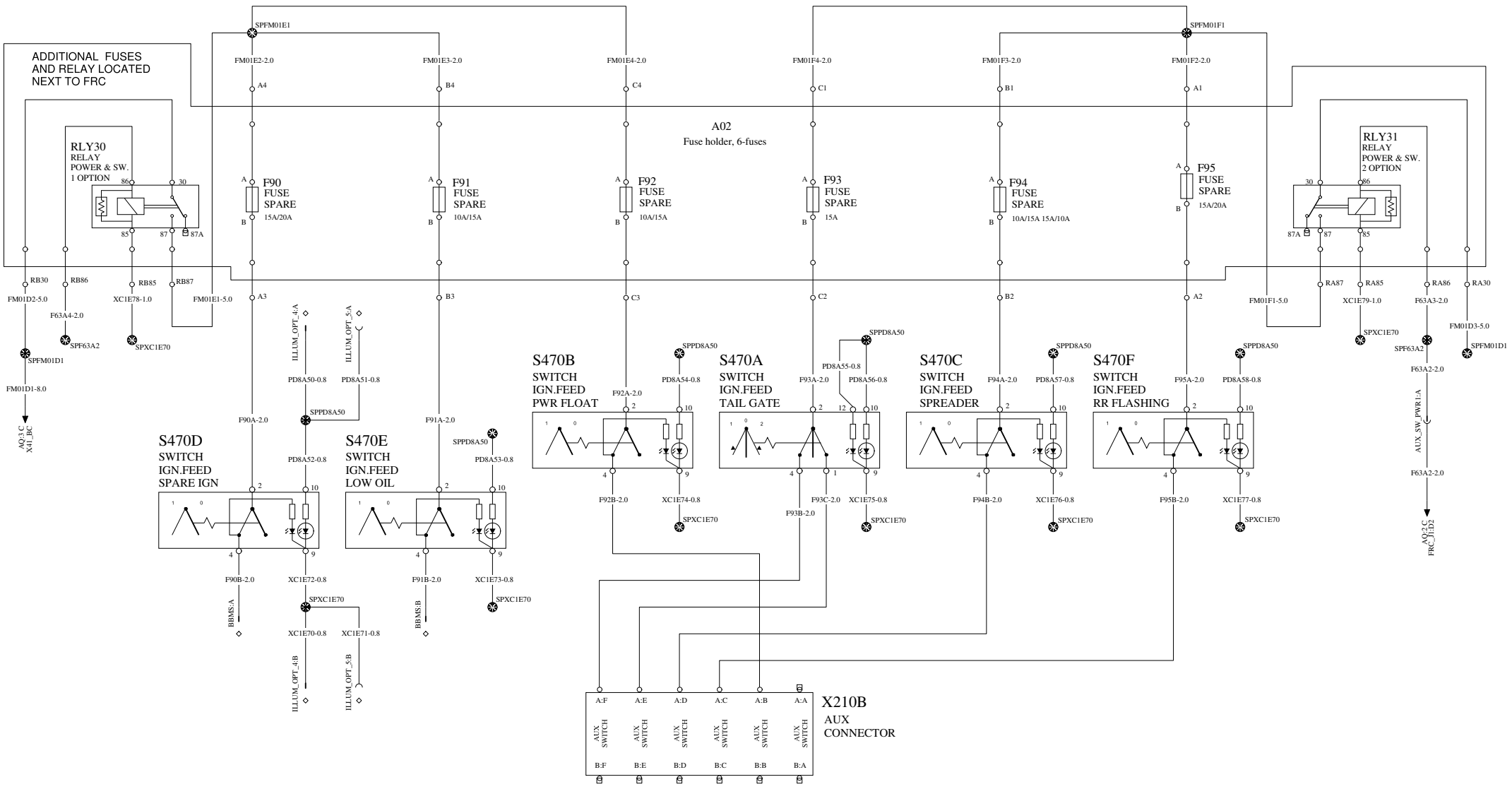

Volvo Truck Corporation	Document title: WIRING DIAGRAM, 12V MACK CONVENTIONAL Document type: PRODUCT SCHEMATIC	Document No: 23970505	Issue: 03	Volume: 1 (1)	Page: 99 (105)

TAILGATE LIFT POWER

WIRING DIAGRAM : ND

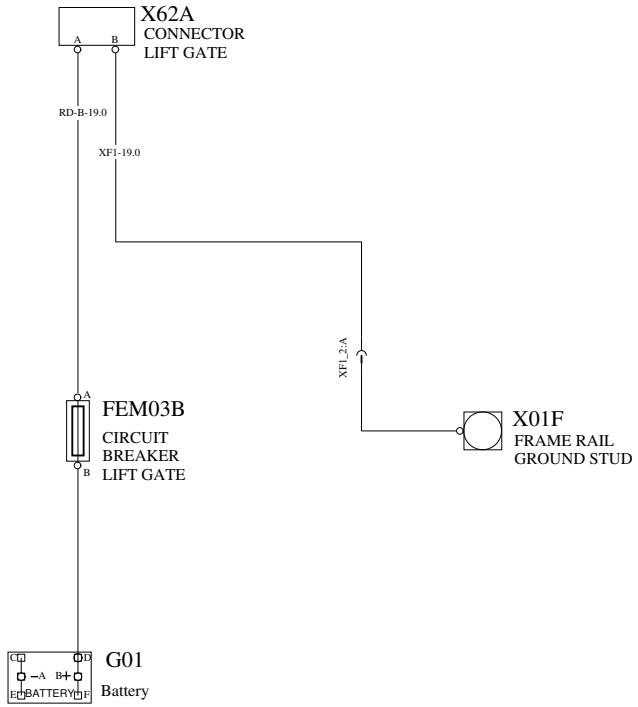

Volvo Truck Corporation	Document title WIRING DIAGRAM, 12V MACK CONVENTIONAL Document type PRODUCT SCHEMATIC	Document No 23970505	Issue 03	Volume 1 (1)	Page 100 (105)

DIAGNOSTICS 1/4 (DL4 - J1587 & DL2 - J2284)

WIRING DIAGRAM: XA

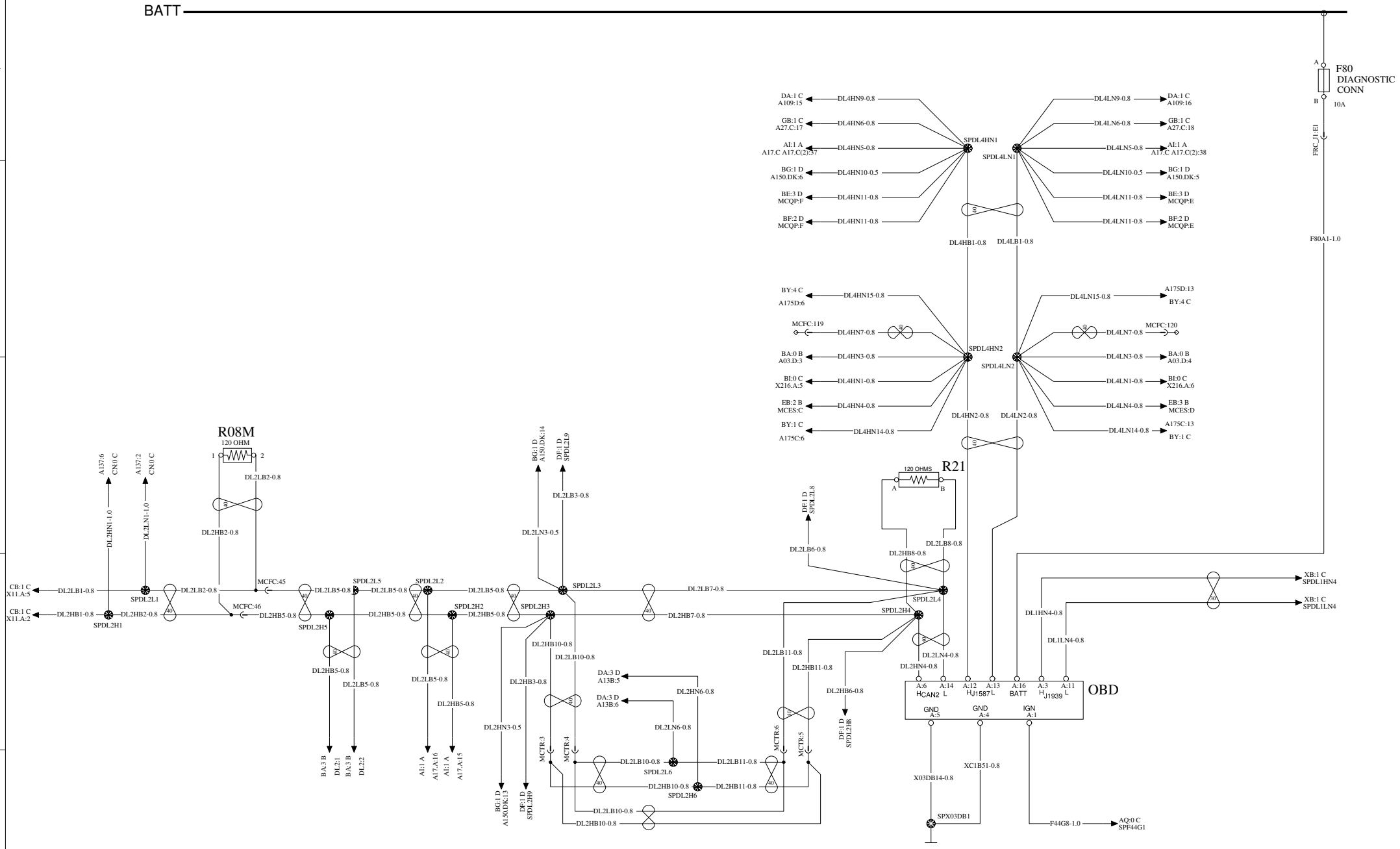

Volvo Truck Corporation	Document title WIRING DIAGRAM, 12V MACK CONVENTIONAL Document type PRODUCT SCHEMATIC	Document No 23970505	Issue 03	Volume 1 (1)	Page 101 (105)

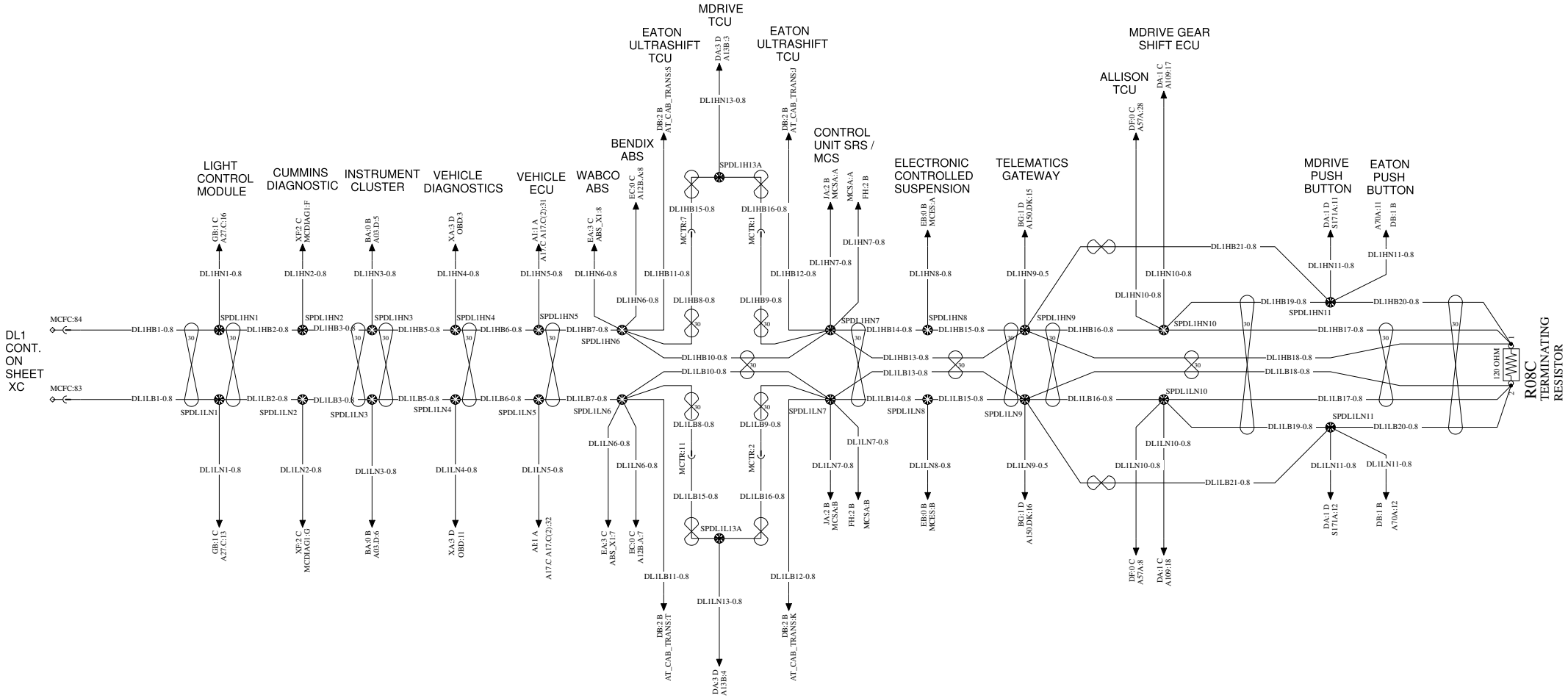

Volvo Truck Corporation	Document title: WIRING DIAGRAM, 12V MACK CONVENTIONAL Document type: PRODUCT SCHEMATIC	Document No: 23970505	Issue: 03	Volume: 1 (1)	Page: 102 (105)

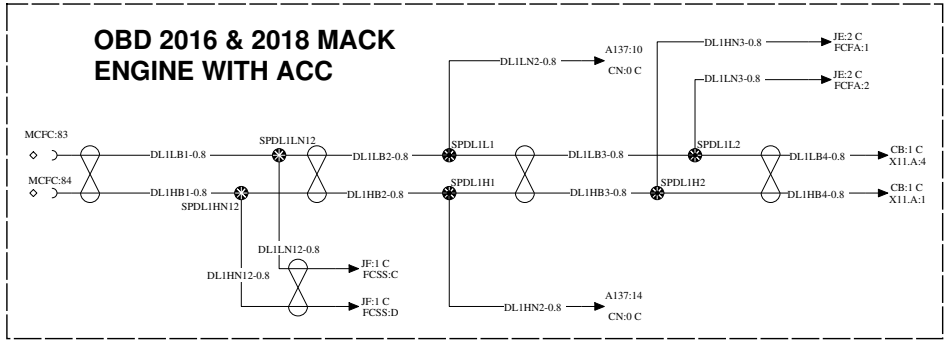

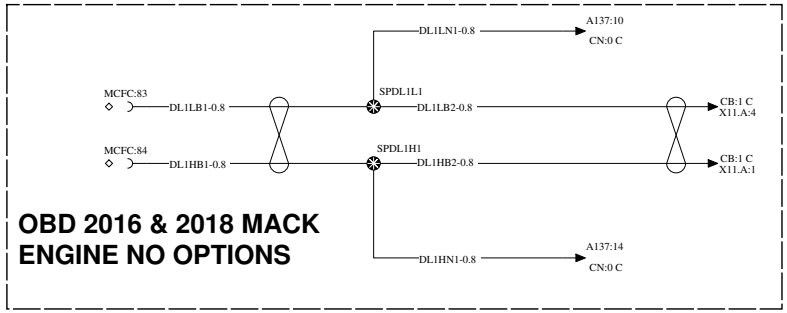

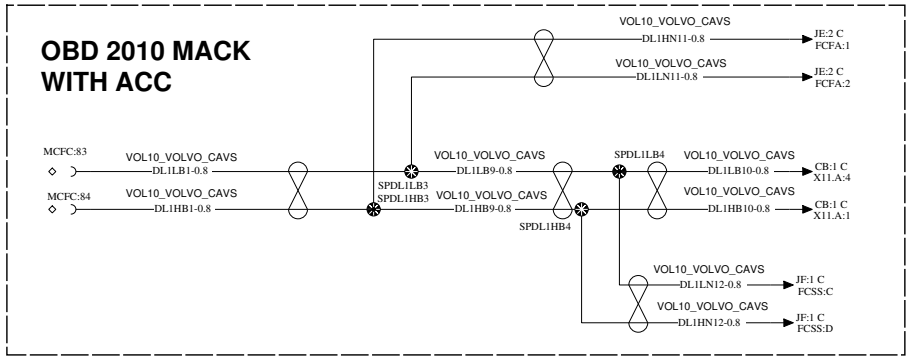

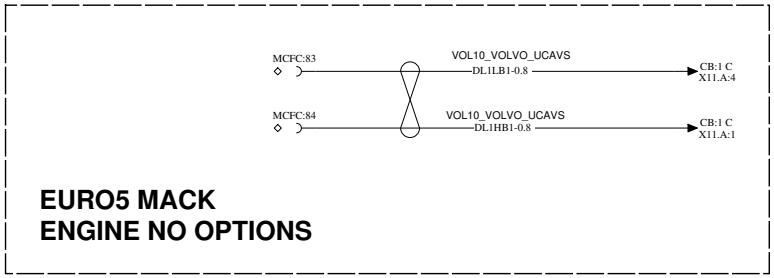

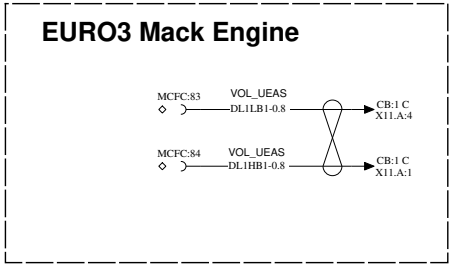

Volvo Truck Corporation	Document title WIRING DIAGRAM, 12V MACK CONVENTIONAL Document type PRODUCT SCHEMATIC	Document No 23970505	Issue 03	Volume 1 (1)	Page 103 (105)

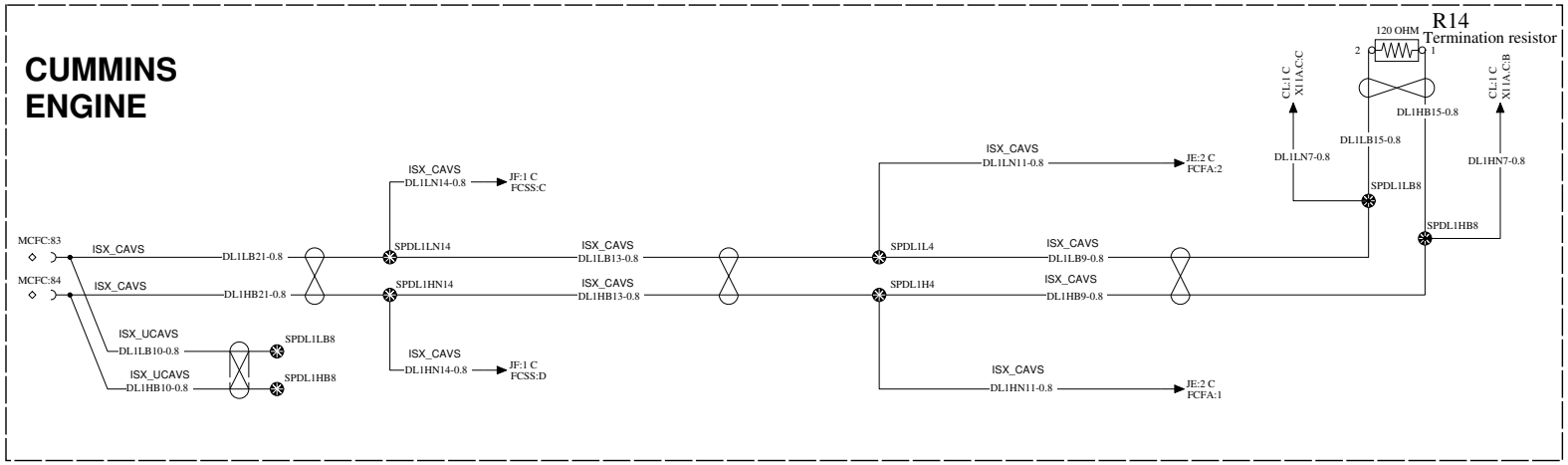
CUMMINS
ENGINE
R14
Termination resistor
120 OHM
2
1
CL:1 C
X11A:C:C
CL:1 C
X11A:C:B
DL1HB15-0.8
DL1LB15-0.8
DL1LN7-0.8
DL1HN7-0.8
SPDL1LB8
SPDL1HB8
ISX_CAVS
DL1LN11-0.8
JE:2 C
FCFA:2
ISX_CAVS
DL1LN14-0.8
JF:1 C
FCSS:C
MCFC:83
ISX_CAVS
DL1LB21-0.8
SPDL1LN14
ISX_CAVS
DL1LB13-0.8
SPDL1L4
ISX_CAVS
DL1LB9-0.8
MCFC:84
ISX_CAVS
DL1HB21-0.8
SPDL1HN14
ISX_CAVS
DL1HB13-0.8
SPDL1H4
ISX_CAVS
DL1HB9-0.8
ISX_UCAVS
DL1LB10-0.8
SPDL1LB8
ISX_UCAVS
DL1HB10-0.8
SPDL1HB8
ISX_CAVS
DL1HN14-0.8
JF:1 C
FCSS:D
ISX_CAVS
DL1HN11-0.8
JE:2 C
FCFA:1

DIAGNOSTICS CUMMINS (DL10)

WIRING DIAGRAM : XF

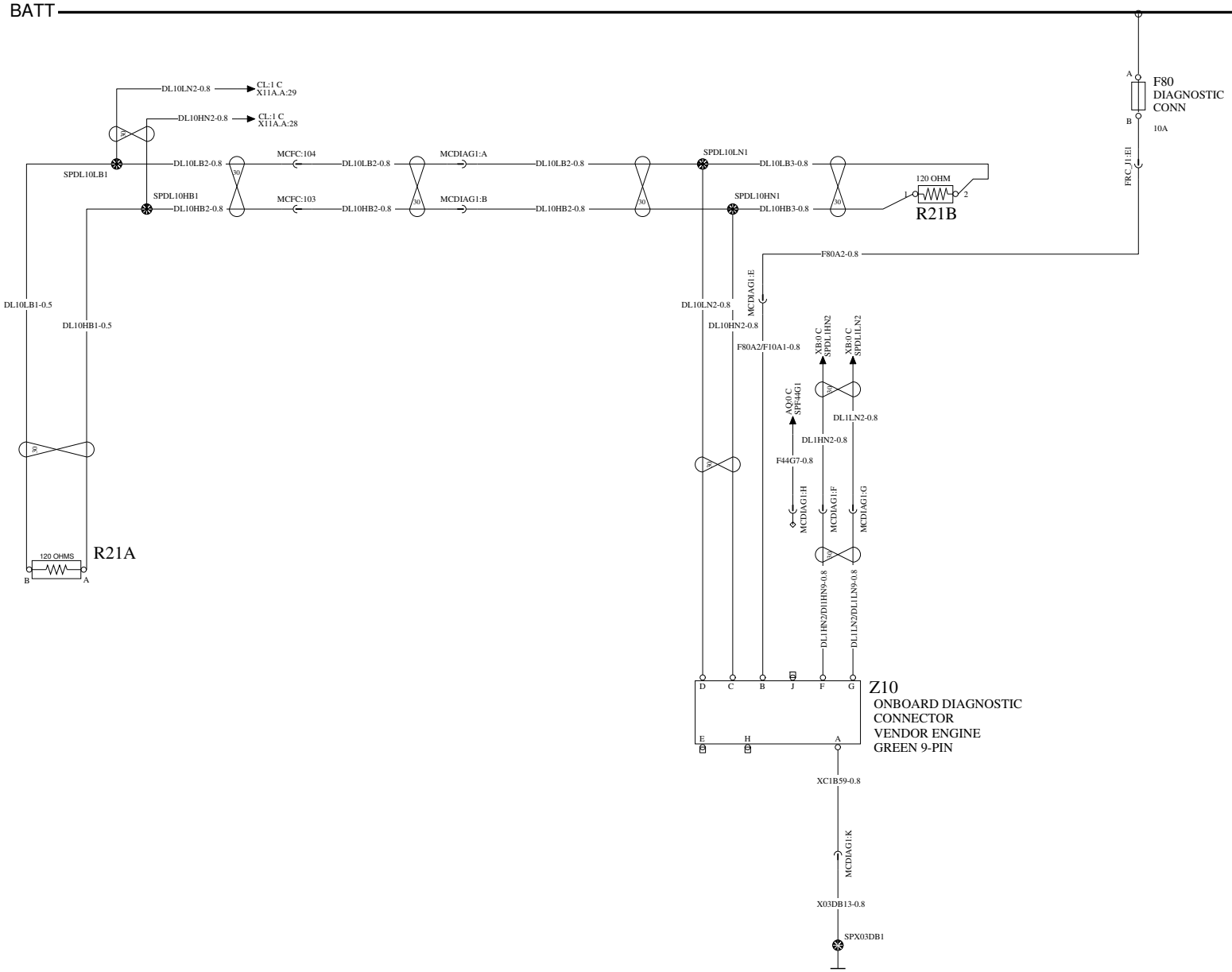

	Document title	Document No	Issue	Volume	Page
Volvo Truck Corporation	WIRING DIAGRAM, 12V MACK CONVENTIONAL Document type PRODUCT SCHEMATIC	23970505	03	1 (1)	105 (105)